We reserve all rights in this document and in the information contained therein. Reproduction, use or disclosure to third parties without express authority is strictly forbidden. © Copyright ABB

The information in this document is subject to change without notice and should not be construed as a commitment by ABB. ABB assumes no responsibility for any errors that may appear in this document.

Except as may be expressly stated anywhere in this document, nothing herein shall be construed as any kind of guarantee or warranty by ABB for losses, damages to persons or property, fitness for a specific purpose or the like.

In no event shall ABB be liable for incidental or consequential damages arising from use of this document.

This document and parts thereof must not be reproduced or copied without ABB's written permission, and contents therof must not be imparted to a third party nor be used for any unauthorized purpose. Contravention will be prosecuted.

Additional copies of this document may be obtained from ABB at its then current charge.

© Copyright 2025 ABB ALL right reserved.

ABB

SE-721 68 Västerås
Sweden

We reserve all rights in this document and in the information contained therein. Reproduction, use or disclosure to third parties without express authority is strictly forbidden. © Copyright ABB

Customer	:	
Robot serial number(s)	:	
Drawing number	:	3HAC082020-008
Drawing version	:	Rev 03

Manufacture	:	ABB Robotics SE
Type	:	Industrial robot controller
Type of installation	:	Floor
Control cabinet	:	OmniCore V400XT
Mains voltage	:	
Supply	:	
Control voltage	:	
Year of construction	:	2023

Project start	:	
Project manager	:	Peter Jansson
Last revision	:	
Designed by	:	Erik Mesaros
Designed date	:	2025-02-26
Number of pages	:	141
	:	

We reserve all rights in this document and in the information contained therein. Reproduction, use or disclosure to third parties without express authority is strictly forbidden. © Copyright ABB

Rev 00 2023/10/16

New release

Rev 01 2024/04/12

Sht 1. Front page updated with new revision, date and pages
Sht 3-3.a. Block diagram updated
Sht 3.b Control level secondary controllers added
Sht 3.c Process level was sht 3.b
Sht 4.b-4.f Graphic pages updated
Sht 5-5.d. Table of contents updated
Sht 6. Device list updated. Sheet 6.a added
Sht 7-15,25. Soft power switch added
Sht 15. Power unit LVLP added
Sht 21, 22, 23 Additional drive units 4-6. Motor output X7 was X8
Sht 27 Processor board. Added X1 and X2. Function text changed for X3, X4, X6 and X9
Sht 28 Switch basic. Function text for X1 was Ability, X4 was WAN
Sht 29,32,44,57,64. Euromap interface added
Sht 30. Robot Signal Exchange Unit, Power distribution added
Sht 30.a Robot Signal Exchange Unit, Communication added
Sht 32. Servo drive system HV added
Sht 33-33a. Servo drive system HV added
Sht 34-34.b. Servo drive system HV added
Sht 38-39. Heat exchanger added
Sht 48-50 Connected service. Added conn. point for antenna
Sht 49 Connected service 4G. Ethernet connection updated, from K7.ETH1 to K7.ETH2. DSQC1101 added
Sht 53. HMIP scrreen with indicators added
Sht 59. Power supply added
Sht 68-69.a. Multimove added
Sht 70-71. 3G/4G, WiFi antenna panel connector added
Sht 76. Additional axis power 3-5 added
Sht 77-80.a. Weldguide added
Sht 82. Servo drive system IRB 390: M6U R1MP was 29, changed to 20
Sht 90-90.a. Servo drive system IRB 2400 added
Sht 92-92a. Servo drive system IRB 4400 added
Sht 93. Customer power/signal IRB 4400 added
Sht 95 Servo 1 axis. R1.SP was R1.MP
Re-structured and merged pages for floor harnesses
New manipulators added: IRB 2400, IRB 4400, IRB 8700, IRB 7710, IRB 7720
Page numbers updated

Rev 02 2024/09/10

Circuit diagram:
Complete update with remodeling of main functions,
removal off double pages, double represented terminals and general
clean up.
Chapters added to make room and simplify the use of this document.

Layout:
Main function links added to main devices to allow quick access to
block and circuit diagram.

Block/single line diagram:
Main function links added to main devices to allow quick access to
block and circuit diagram.

Device list:
Main function links added in device list to allow quick access to
block and circuit diagram.

Force control added under chapter Applications.

Rev 03 2025/03/10

Sht 2. Rev 03 added and revision text adjusted.
Sht 3.2-7. X3 & X4 shifted places.
Sht 4.a.5-8. Text & picture to "Navigating this document" has been updated.
Sht 4.d.3-6. X2 & X3 shifted places & X17, (X81, X91, X92) & customer interface shifted places.
Sht 12.1 & 13.1. Pins & sockets shifted place.
Sht 46.3. Conductor tag deleted on General stop jumpers.
Sht 70.3-4. 3HAC085903-001 was 3HAC076539-001 & ETH2 was ETH1.
Sht. 87.5. T10 was with three exits.
Sht 115.2 & 117.2. AWG size adjusted.
Sht 159 - 160. Added.

Overall device tag: "Main Controller" was "Primary Controller" & "Additional Controller 1" was "Secondary Controller" & "Additional Controller 2" was "Third Controller".

We reserve all rights in this document and in the information contained therein. Reproduction, use or disclosure to third parties without express authority is strictly forbidden. © Copyright ABB

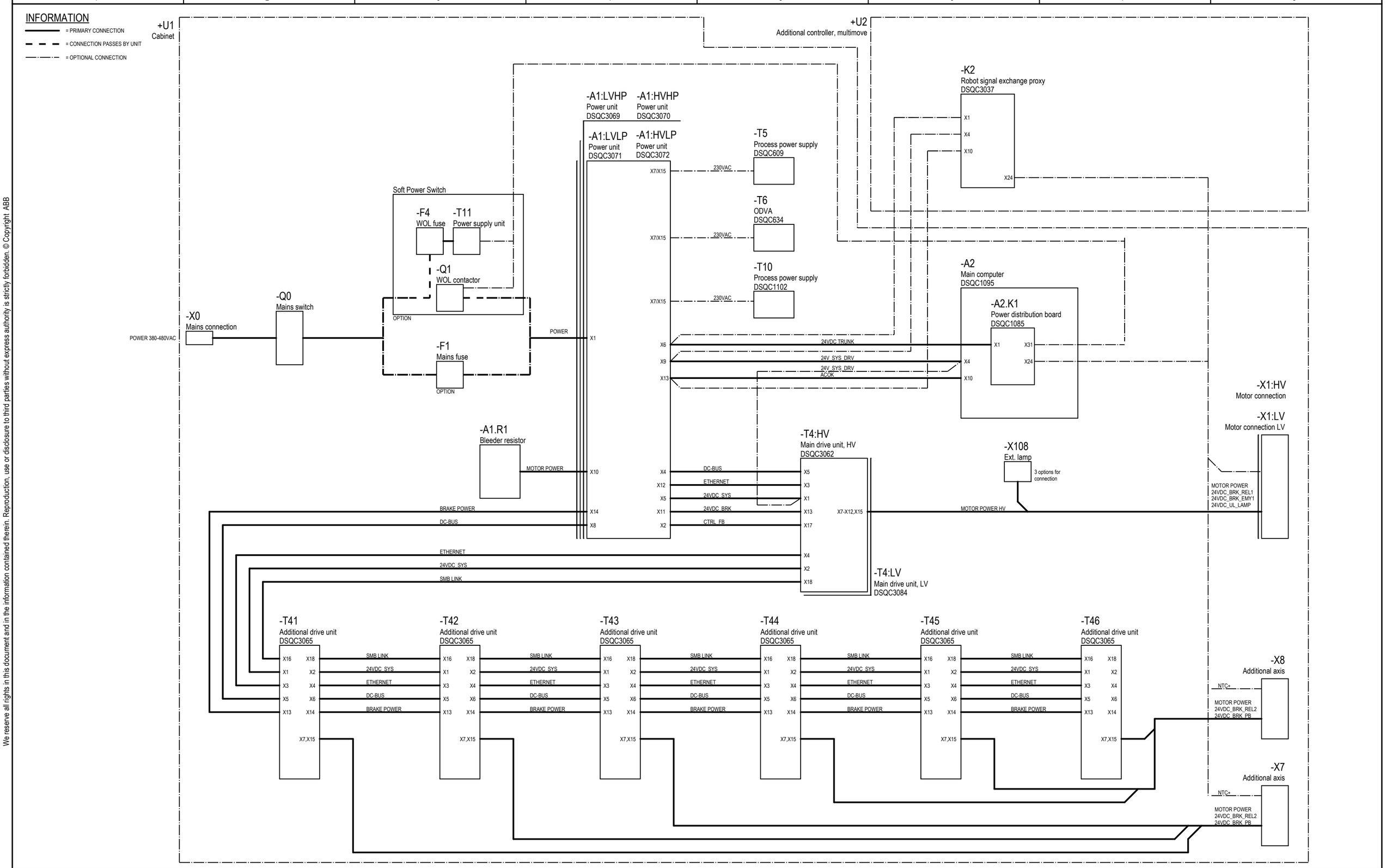

Latest revision: See revision text		Lab/Office: RA/RDP	OmniCore V400XT Block diagram, drive level	Status: APPROVED	Plant: = Location: + Sublocation: +
				Document no. 3HAC082020-008	Rev. Ind 03
					Page 3 Next 3.a Total 142
Prepared by, date: E. Mesaros	Approved by, date: M. Wadstein 2025-03-10				

We reserve all rights in this document and in the information contained therein. Reproduction, use or disclosure to third parties without express authority is strictly forbidden. © Copyright ABB

INFORMATION

= PRIMARY CONNECTION

= CONNECTION PASSES BY UNIT

= OPTIONAL CONNECTION

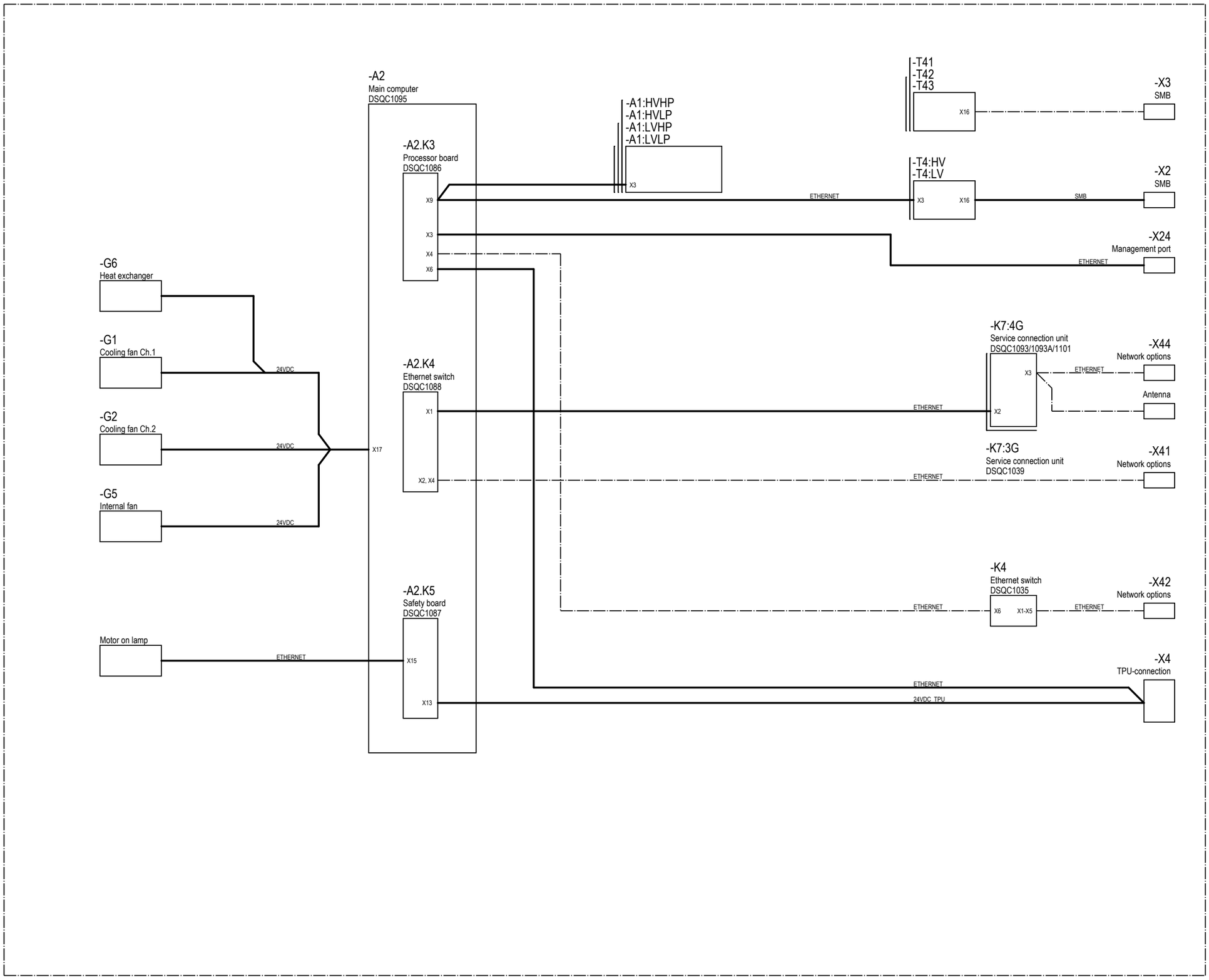

Latest revision: See revision text		Lab/Office: RA/RDP	OmniCore V400XT Block diagram, control level	Status: APPROVED	Plant: = Location: + Sublocation: +
Prepared by, date: E. Mesaros	Approved by, date: M. Wadstein 2025-03-10			Document no. 3HAC082020-008	Rev. Ind 03
					Page 3.a Next 3.b Total 142

We reserve all rights in this document and in the information contained therein. Reproduction, use or disclosure to third parties without express authority is strictly forbidden. © Copyright ABB

INFORMATION

= PRIMARY CONNECTION

= CONNECTION PASSES BY UNIT

= OPTIONAL CONNECTION

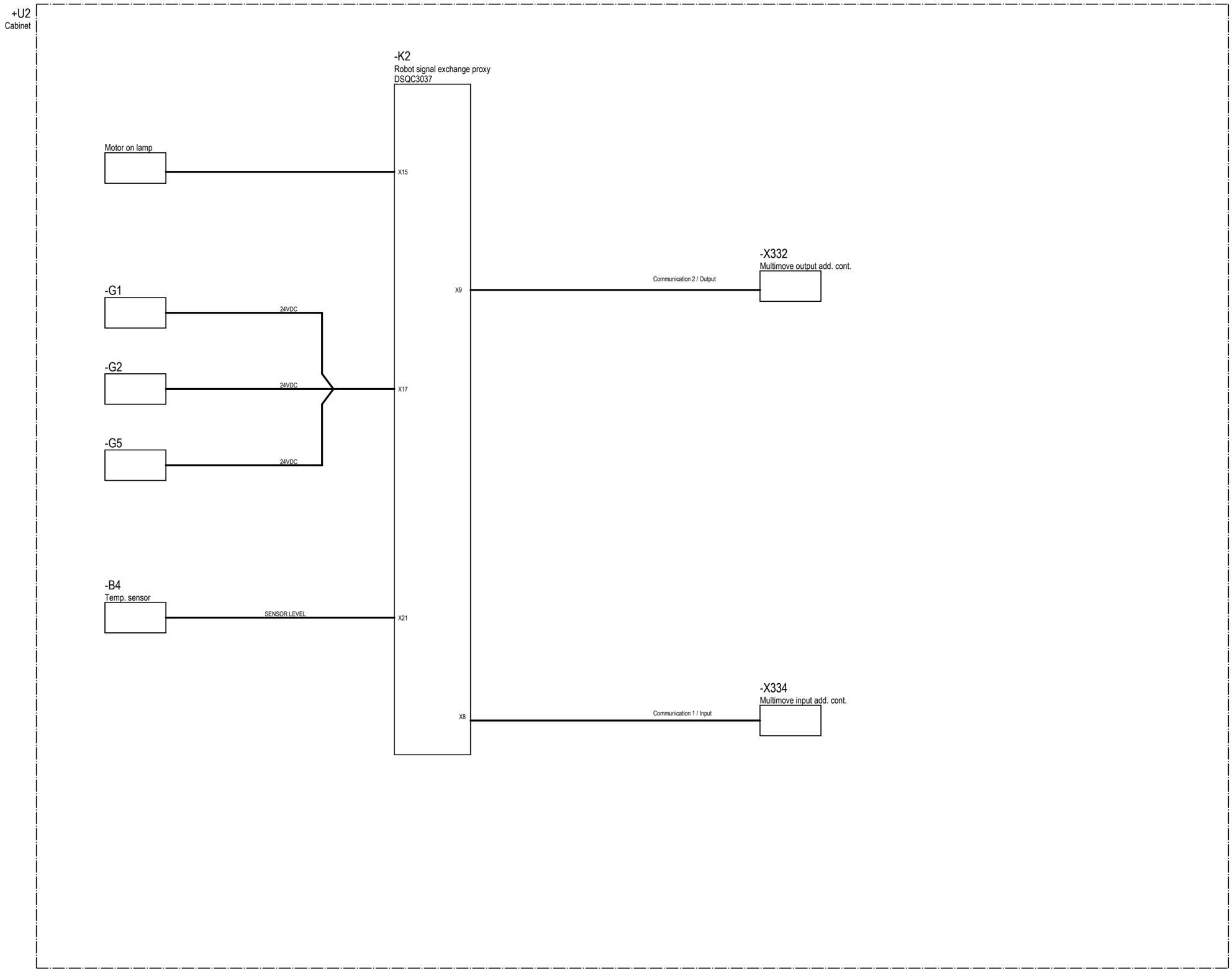

Latest revision: See revision text		Lab/Office: RA/RDP	OmniCore V400XT Block diagram, control level additional controllers	Status: APPROVED	Plant: = Location: + Sublocation: +	
Prepared by, date: E. Mesaros	Approved by, date: M. Wadstein 2025-03-10			Document no. 3HAC082020-008	Rev. Ind 03	Page 3.b Next 3.c Total 142

We reserve all rights in this document and in the information contained therein. Reproduction, use or disclosure to third parties without express authority is strictly forbidden. © Copyright ABB

INFORMATION

= PRIMARY CONNECTION

= CONNECTION PASSES BY UNIT

= OPTIONAL CONNECTION

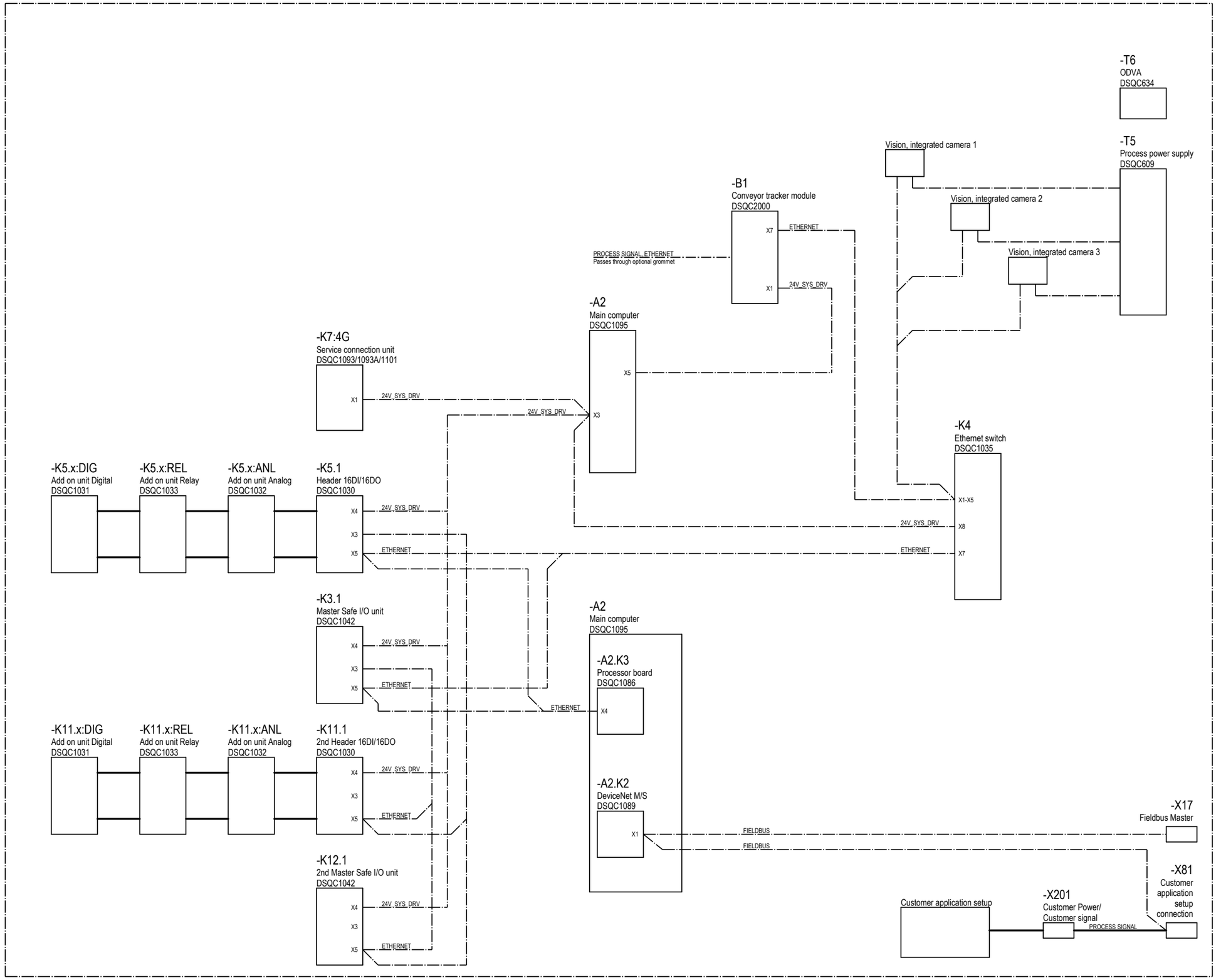

Latest revision: See revision text	ABB	Lab/Office: RA/RDP	OmniCore V400XT Block diagram, process level	Status: APPROVED	Plant: = Location: + Sublocation: +
Prepared by, date: E. Mesaros	Approved by, date: M. Wadstein 2025-03-10			Document no. 3HAC082020-008	Rev. Ind 03
					Page 3.c Next 4 Total 142

Location information

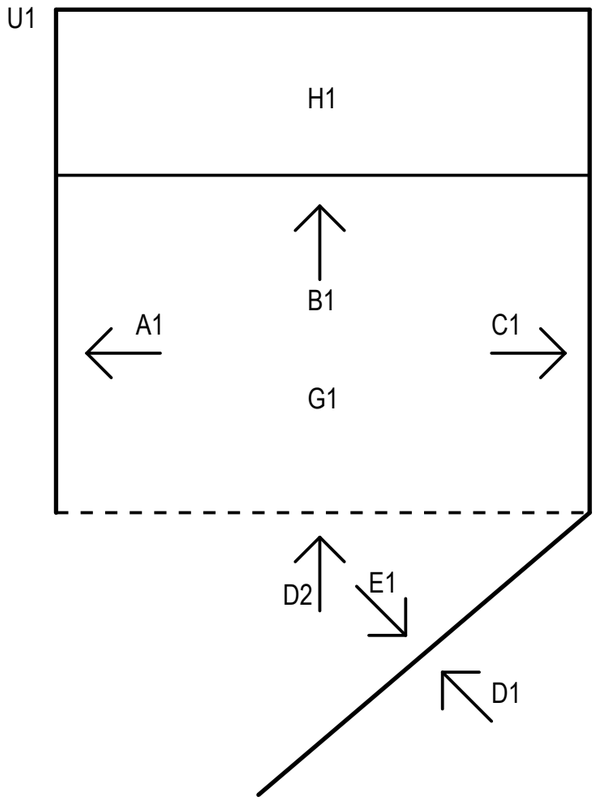

Location	Definition	Description
+U1	Enclosure	Controller cabinet
A1	-	Inside left hand side
B1	Layer 1	Back plane
C1	-	Inside right hand side
D1	HMI panel, on door	Front door, outside
D2	Fixed installation panel	Front bottom plate
E1	Layer 2	Front door, inside
F1	Roof	Inside top plate
G1	Floor	Inside bottom plate
H1	Back compartment	Back compartment

+U1	Enclosure	Main Controller cabinet
+U2	Enclosure, Multimove	Additional Controller 1 cabinet
+U1	Enclosure, Multimove	Additional Controller 2 cabinet
+G1	Floor	Floor cables
+H1	Manipulator	Manipulator foot

We reserve all rights in this document and in the information contained therein. Reproduction, use or disclosure to third parties without express authority is strictly forbidden. © Copyright ABB

We reserve all rights in this document and in the information contained therein. Reproduction, use or disclosure to third parties without express authority is strictly forbidden. © Copyright ABB

Graphical symbols according to IEC 60617.

Cable/wire information

=A1-W120 | AWG8 BK

| W = Wire/cable
| A1 = Device

| AWG8 = Wire size

| BK = Wire colour

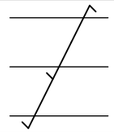

Triple-twisted conductors

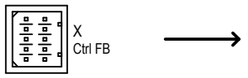

X
Ctrl FB

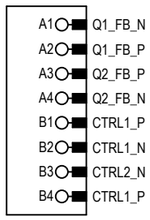

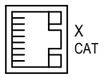

X
CAT

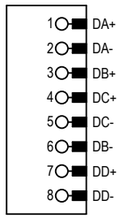

X
SMB LINK

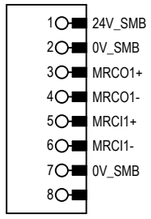

Navigating this document

Jump sequence for "three-way" jumps
By default, "three-way" jumps are created at all components in the PDF on export:

When you click in the middle area of a main function, you jump to the device page.
When you click the middle area of the component for a cross-referenced auxiliary function, a jump occurs to the main function.
By clicking the left area of a component you jump forward in a jump sequence.
By clicking the right area of a component you jump backward in a jump sequence.
All representation types, placements, and report entries for a device are integrated into the jump sequence.
This is how you find out about the sequence in a jump sequence:

Click the visible DT or a representation type to display the data of the device.
The sequence of placements is displayed in the References area.
The sequence in the jump sequence corresponds to the displayed sequence of placements.

Tip:
To recognize the jump area at a component in the PDF, you click the component with the left mouse button and hold down the mouse button.
The respective jump area is temporarily shown as a selected area in the PDF. You can then move the mouse pointer if you do not wish to perform the jump.

Example:
The following figure shows a "three-way" jump at a safety fuse -F1.

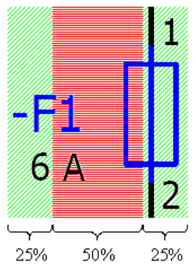

We reserve all rights in this document and in the information contained therein. Reproduction, use or disclosure to third parties without express authority is strictly forbidden. © Copyright ABB

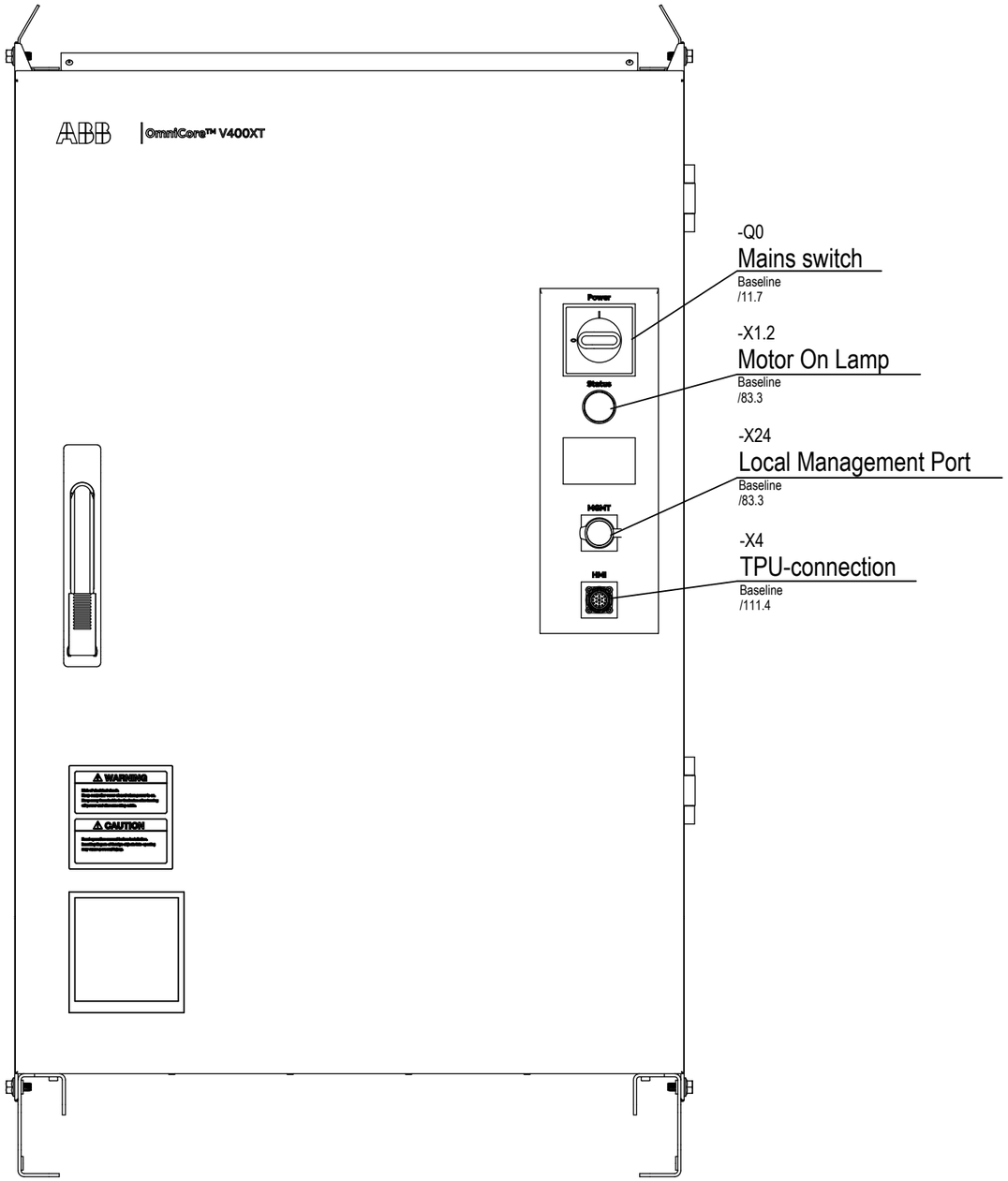

Front view

Latest revision: See revision text	ABB	Lab/Office: RA/RDP	OmniCore V400XT Front view of cabinet	Status: APPROVED	Plant: = Location: + Sublocation: +
Prepared by, date: E. Mesaros	Approved by, date: M. Wadstein 2025-03-10			Document no. 3HAC082020-008	Rev. Ind 03
					Page 4.b Next 4.c Total 142

We reserve all rights in this document and in the information contained therein. Reproduction, use or disclosure to third parties without express authority is strictly forbidden. © Copyright ABB

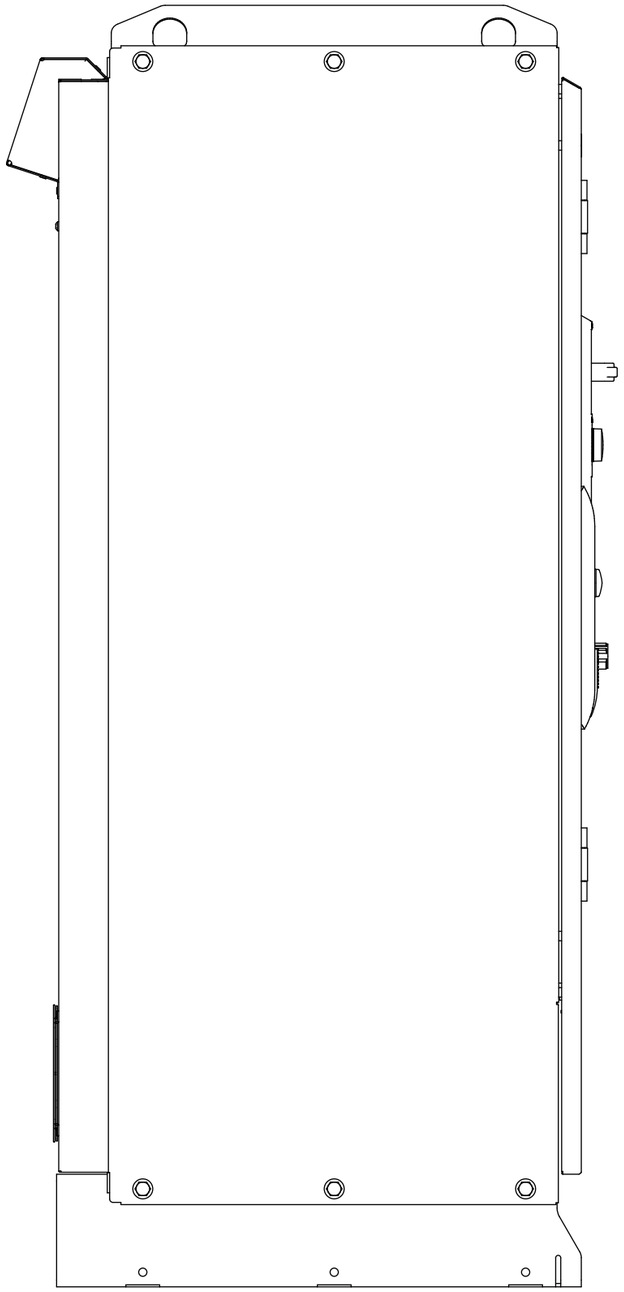

Left view

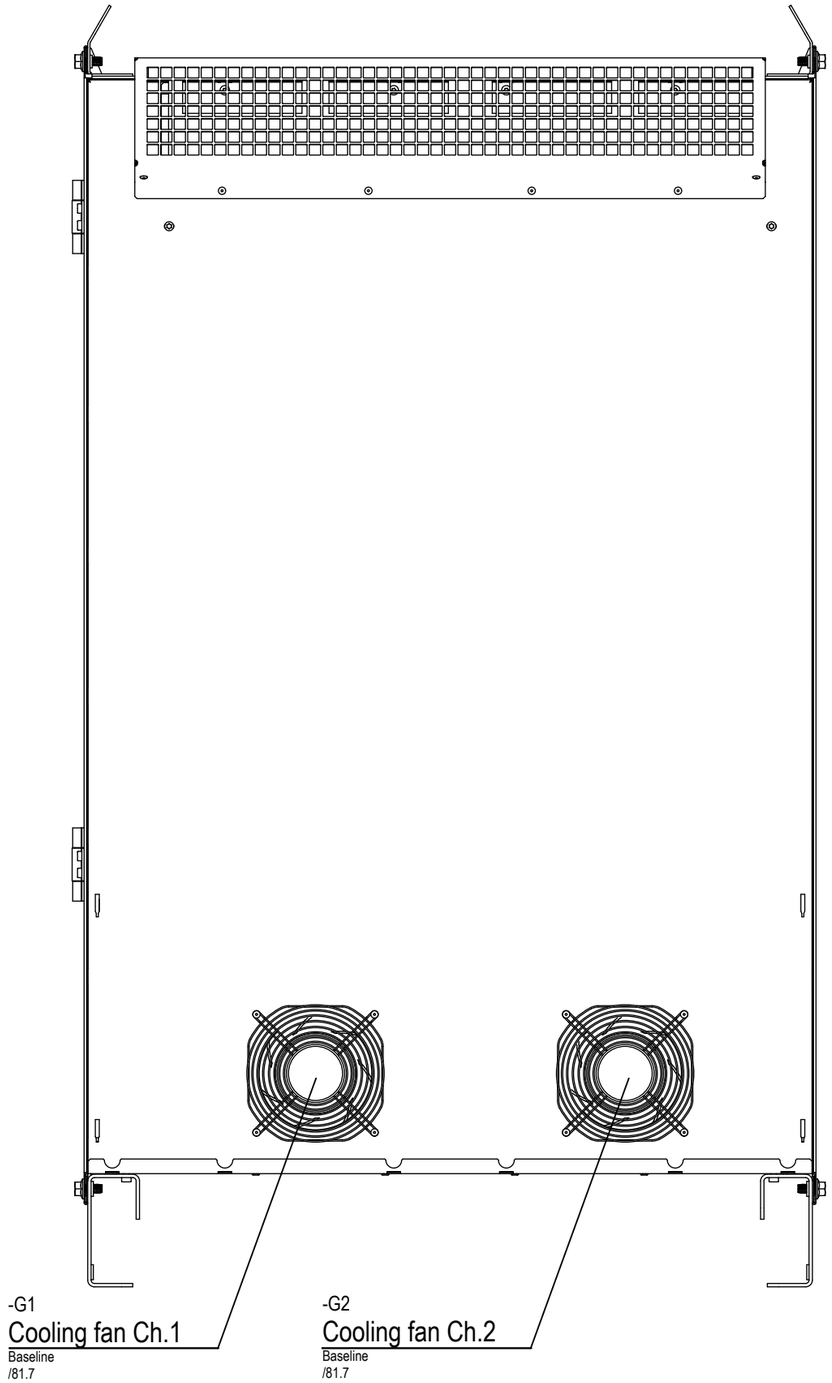

Back view

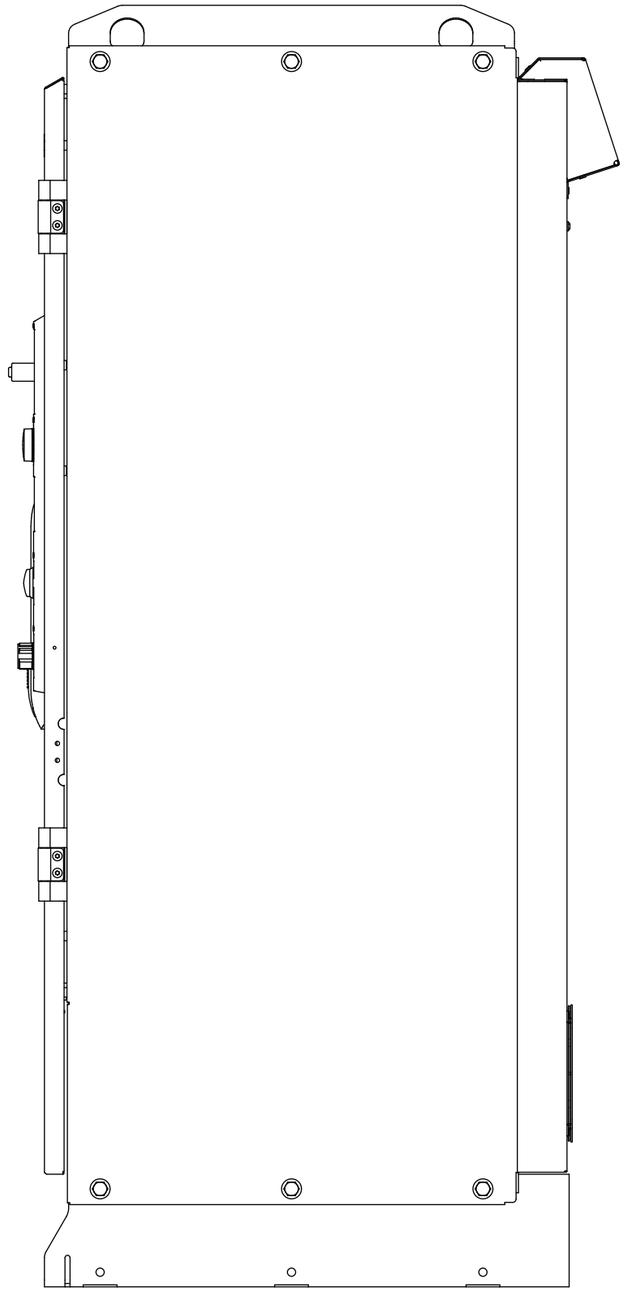

Right view

Latest revision: See revision text		ABB	Lab/Office: RA/RDP	OmniCore V400XT Back and side views of cabinet	Status: APPROVED	Plant: = Location: + Sublocation: +
Prepared by, date: E. Mesaros	Approved by, date: M. Wadstein 2025-03-10				Document no. 3HAC082020-008	Rev. Ind 03
						Page 4.c Next 4.d Total 142

Note. Depending on chosen options, the graphical visualization does not always correspond to reality.

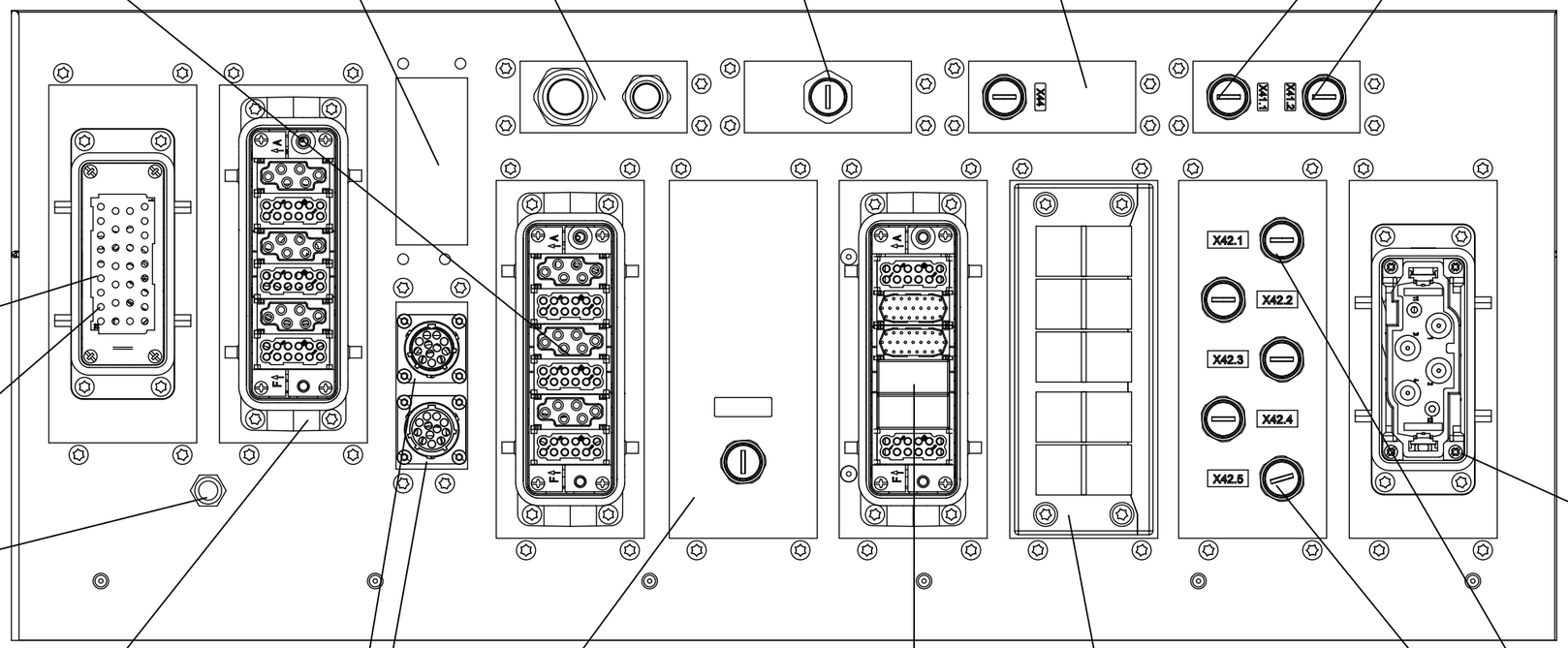

-X8
Additional axis power, drive 3-5
Dep. on robot
/148.7

-X8
Additional axis power, drive 4-6
3062-1
/148.7

Reserved interface

Customer interface
2x Cable gland

-X63
Process flow sensor
3347-1
/119.4

-X44
Network connectors
3013-1
/123.4

-X41.1
Network connectors
3060-1
/121.4

-X41.2
Network connectors
3060-1
/121.4

-X1:HV
Motor connection
Dep. on robot
/101.3

-X1:LV
Motor connection LV
Dep. on robot
/109.4

-PE
Protective ground
Baseline
/84.3

-X0
Mains connection
3008-1/2/3
/12.1

-X7
Additional axis power, drive 1-3
3062-1
/146.5

-X3
SMB connector
3062-1
/114.7

-X2
SMB connector
Dep. on Robot
/113.4

-X17
DeviceNet connector
3056-1
/115.5

-X81
Distributed process control
3055-1
/116.4

-X91
Distributed process control
3055-2
/118.5

-X92
Distributed process control
3055-2
/118.5

Customer interface
Cable grommet

-X42.1
Network connectors
3061-1
/122.4

-X42.5
Network connectors
3061-1
/122.4

Fixed installation panel

We reserve all rights in this document and in the information contained therein. Reproduction, use or disclosure to third parties without express authority is strictly forbidden. © Copyright ABB

Latest revision: See revision text		ABB	Lab/Office: RA/RDP	OmniCore V400XT FIP view of cabinet	Status: APPROVED	Plant: = Location: + Sublocation: +
Prepared by, date: E. Mesaros	Approved by, date: M. Wadstein 2025-03-10				Document no. 3HAC082020-008	Rev. Ind 03

Note. Depending on chosen options, the graphical visualization does not always correspond to reality.

Inside view

Main drive unit HV

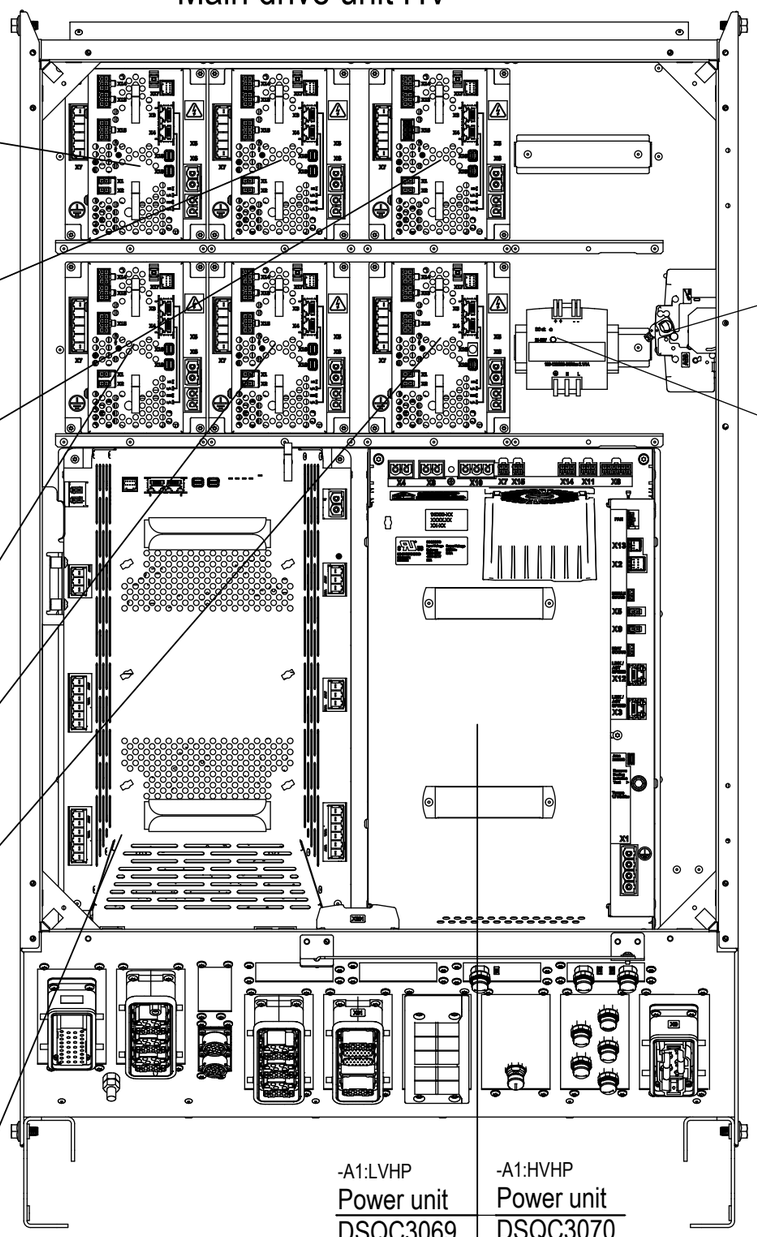

-T44
Additional drive unit
DSQC3065
3062-1
/36.4

-T45
Additional drive unit
DSQC3065
3062-1
/37.4

-T46
Additional drive unit
DSQC3065
3062-1
/38.4

-T41
Additional drive unit
DSQC3065
3062-1
/33.4

-T42
Additional drive unit
DSQC3065
3062-1
/34.4

-T43
Additional drive unit
DSQC3065
3062-1
/35.4

-F1
Mains fuse
16A or 32A dep. on Power unit
3008-3
/13.7

-T5
Process power supply
DSQC609
3015-2
/85.4

-T6
ODVA
DSQC634
3049-1
/86.4

-T10
Process power supply
DSQC1102
3015-3
/87.4

-T4:HV
Main drive unit, HV
DSQC3062
Drivesystem E*
/31.4

-A1:LVHP
Power unit
DSQC3069
Drivesystem *4
/15.3

-A1:HVHP
Power unit
DSQC3070
Drivesystem *8
/16.3

-A1:LVLP
Power unit
DSQC3071
Drivesystem *5
/18.3

-A1:HVLP
Power unit
DSQC3072
Drivesystem *9
/17.3

Main drive unit LV

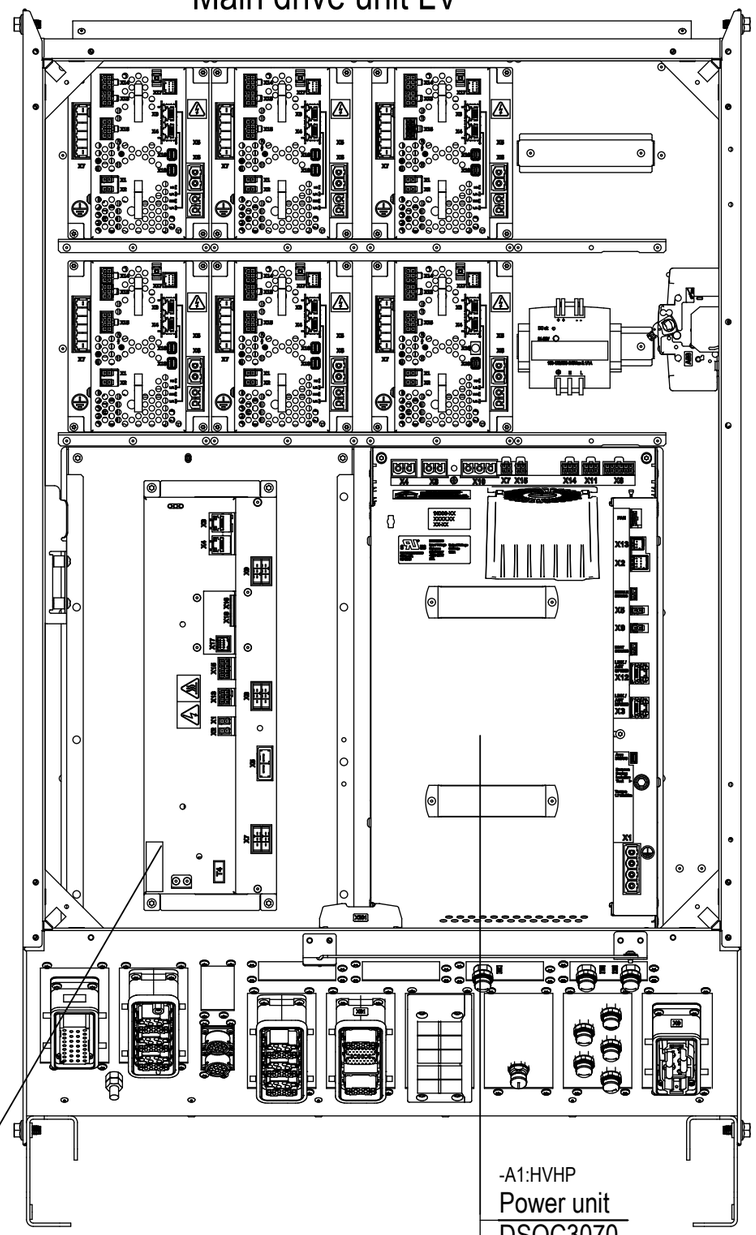

-T4:LV
Main drive unit, LV
DSQC3084
Drivesystem B*
/32.4

-A1:HVHP
Power unit
DSQC3070
Drivesystem *8
/16.3

-A1:HVLP
Power unit
DSQC3072
Drivesystem *9
/17.3

We reserve all rights in this document and in the information contained therein. Reproduction, use or disclosure to third parties without express authority is strictly forbidden. © Copyright ABB

Latest revision: See revision text	ABB	Lab/Office: RA/RDP	OmniCore V400XT Inside view of cabinet	Status: APPROVED	Plant: = Location: + Sublocation: +
Prepared by, date: E. Mesaros	Approved by, date: M. Wadstein 2025-03-10			Document no. 3HAC082020-008	Rev. Ind 03

Note. Depending on chosen options, the graphical visualization does not always correspond to reality.

-K5.1
Header 16DI/16DO
DSQC1030
3032-1
/61.3

-K5.x:ANL
Add on unit Analog
DSQC1032
Possible positions K5.2/3/4/5
3034-1
/62.3

-K5.x:REL
Add on unit Relay
DSQC1033
Possible positions K5.2/3/4/5
3035-1
/63.3

-K5.x:DIG
Add on unit Digital
DSQC1031
Possible positions K5.2/3/4/5
3033-1
/64.3

-K3.1
Master Safe I/O unit
DSQC1042
3037-1
/65.3

-X102
24VDC terminal block
3015-3
/87.6

-X103
24VDC terminal block
3015-3
/85.6

-K4
Ethernet switch
DSQC1035
3014-1
/68.3

-K7:3G
Service connection unit
DSQC1039
3013-3
/69.4

-K7:4G
Service connection unit
DSQC1093/1093A/1101
3013-5/6/7
/70.4

-K7
Service connection unit
DSQ1041
3013-1
/72.3

-K7:WiFi
Service connection unit
DSQC1040
3013-2
/71.4

-G5
Internal fan
Baseline
/81.7

-K12.1
2nd Master Safe I/O unit
DSQC1042
3037-1
/67.3

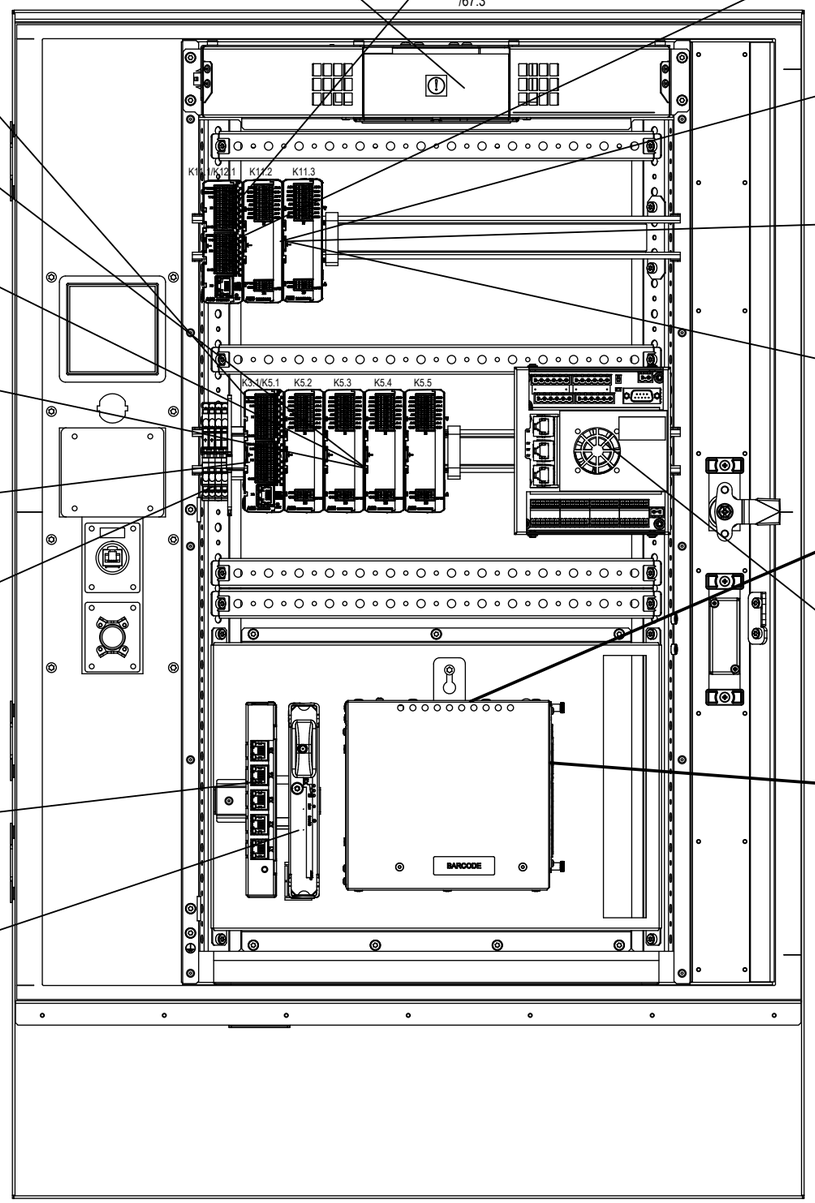

-K11.1
2nd Header 16DI/16DO
DSQC1030
3032-1
/66.3

-K11.x:ANL
Add on unit Analog
DSQC1032
Possible positions K11.2/3
3034-1
/62.3

-K11.x:REL
Add on unit Relay
DSQC1033
Possible positions K11.2/3
3035-1
/63.3

-K11.x:DIG
Add on unit Digital
DSQC1031
Possible positions K11.2/3
3033-1
/64.3

-B1
Conveyor tracker module
DSQC2000
3041-1
/73.4

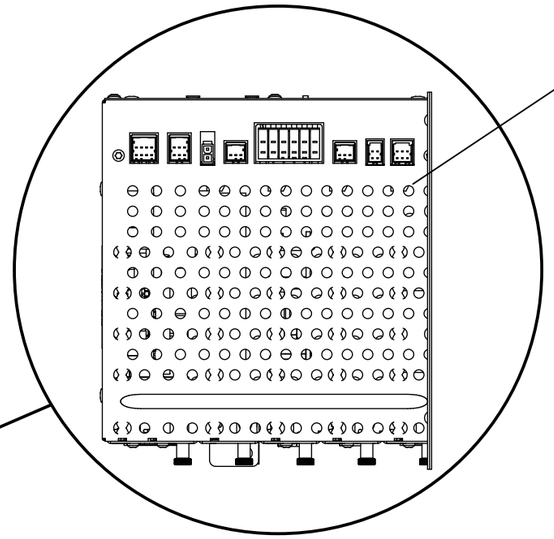

-A2
Main computer
DSQC1095
Baseline
/41.3

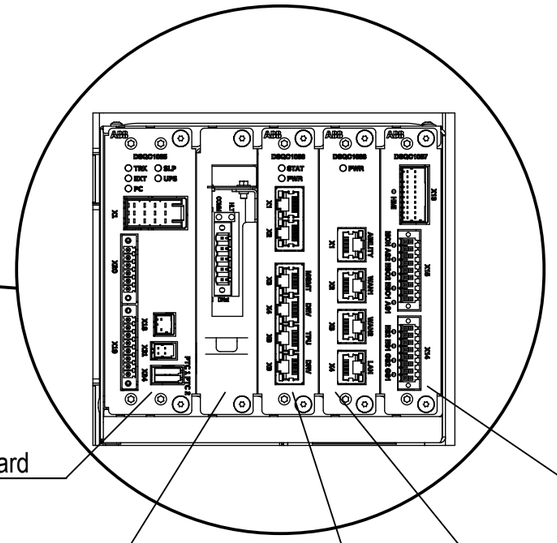

-A2.K1
Power distribution board
DSQC1085
Baseline
/42.4

-A2.K2
DeviceNet M/S
DSQC1089
Baseline
/43.2

-A2.K3
Processor board
DSQC1086
Baseline
/44.4

-A2.K4
Ethernet switch
DSQC1088
Baseline
/45.4

-A2.K5
Safety board
DSQC1087
Baseline
/46.4

Door view

We reserve all rights in this document and in the information contained therein. Reproduction, use or disclosure to third parties without express authority is strictly forbidden. © Copyright ABB

Latest revision: See revision text	ABB	Lab/Office: RA/RDP	OmniCore V400XT Door view of cabinet	Status: APPROVED	Plant: = Location: + Sublocation: +
Prepared by, date: E. Mesaros	Approved by, date: M. Wadstein 2025-03-10			Document no. 3HAC082020-008	Rev. Ind 03

Page 4.f
Next 5
Total 142

TABLE OF CONTENTS

PAGE	PAGE DESCRIPTION	Date	Edited by
/0	Copyright	2025-02-26	SEERMES
/1	Front page	2025-02-26	SEERMES
/2	Revisions	2025-03-05	SEERMES
/3	Block diagram, drive level	2025-03-04	SEERMES
/3.a	Block diagram, control level	2025-02-18	SEERMES
/3.b	Block diagram, control level additional controllers	2025-03-05	SEERMES
/3.c	Block diagram, process level	2025-02-18	SEERMES
/4	General information	2025-03-05	SEERMES
/4.a	Symbol information	2025-02-18	SEERMES
/4.b	Front view of cabinet	2024-09-05	SEANHAG7
/4.c	Back and side views of cabinet	2024-09-04	SEANHAG7
/4.d	FIP view of cabinet	2025-03-03	SEERMES
/4.e	Inside view of cabinet	2025-02-18	SEERMES
/4.f	Door view of cabinet	2025-02-18	SEERMES
/5	Table of contents	2025-03-05	SEERMES
/5.a	Table of contents	2025-03-05	SEERMES
/5.b	Table of contents	2025-03-05	SEERMES
/5.c	Table of contents	2025-03-05	SEERMES
/5.d	Table of contents	2025-02-26	SEERMES
/6	Device tag list	2025-03-05	SEERMES
/6.a	Device tag list	2025-03-05	SEERMES
/10	----------POWER----------	2024-10-11	SEANHAG7
/11	Power input	2025-02-18	SEERMES
/12	Power input	2025-02-28	SEERMES
/13	Power input	2025-02-28	SEERMES
/14	Soft power switch	2025-02-19	SEERMES
/15	Power unit LVHP	2025-02-21	SEERMES
/16	Power unit HVHP	2025-02-21	SEERMES
/17	Power unit HVLP	2025-02-21	SEERMES
/18	Power unit LVLP	2025-02-21	SEERMES
/30	----------DRIVE----------	2024-07-10	SEANHAG7
/31	Drive unit HV	2025-02-18	SEERMES
/32	Drive unit LV	2025-02-18	SEERMES

We reserve all rights in this document and in the information contained therein. Reproduction, use or disclosure to third parties without express authority is strictly forbidden. © Copyright ABB

TABLE OF CONTENTS

PAGE	PAGE DESCRIPTION	Date	Edited by
/33	Additional drive unit 1	2025-02-18	SEERMES
/34	Additional drive unit 2	2025-02-18	SEERMES
/35	Additional drive unit 3	2025-02-18	SEERMES
/36	Additional drive unit 4	2025-02-18	SEERMES
/37	Additional drive unit 5	2025-02-18	SEERMES
/38	Additional drive unit 6	2025-02-18	SEERMES
/40	----------LOGIC----------	2024-07-10	SEANHAG7
/41	Main computer	2025-02-18	SEERMES
/42	Power distribution board	2025-02-18	SEERMES
/43	DeviceNet M/S	2025-02-18	SEERMES
/44	Processor board	2025-02-20	SEERMES
/45	Switch basic	2025-02-18	SEERMES
/46	Safety board	2025-03-05	SEERMES
/47	Robot Signal Exchange Unit	2025-02-18	SEERMES
/60	----------COMMUNICATION----------	2024-07-10	SEANHAG7
/61	Master I/O unit	2025-02-18	SEERMES
/62	Add on unit Analog	2024-10-11	SEANHAG7
/63	Add on unit Relay	2025-02-18	SEERMES
/64	Add on unit Digital	2025-02-18	SEERMES
/65	Master Safe I/O unit	2025-02-18	SEERMES
/66	Master I/O unit 2nd	2025-02-18	SEERMES
/67	Master Safe I/O unit 2nd	2025-02-18	SEERMES
/68	Ethernet switch	2025-02-18	SEERMES
/69	Connected service, 3G	2025-02-18	SEERMES
/70	Connected service, 4G	2025-02-18	SEERMES
/71	Connected service, Wi-Fi	2025-02-18	SEERMES
/72	Connected service, Wired	2025-02-18	SEERMES
/73	Conveyor tracker module	2025-02-18	SEERMES
/74	HMIP screen with indicators	2025-02-18	SEERMES
/80	----------CABINET----------	2024-07-10	SEANHAG7
/81	Cooling	2024-09-05	SEANHAG7
/82	Heat exchanger	2025-02-18	SEERMES
/83	Service port & Motors On Lamp	2025-02-18	SEERMES

We reserve all rights in this document and in the information contained therein. Reproduction, use or disclosure to third parties without express authority is strictly forbidden. © Copyright ABB

TABLE OF CONTENTS

PAGE	PAGE DESCRIPTION	Date	Edited by
/84	Protective ground	2025-02-18	SEERMES
/85	Power supply	2025-02-26	SEERMES
/86	Power supply	2025-02-18	SEERMES
/87	Power supply	2025-02-28	SEERMES
/100	----------FRONT PANEL CONNECTIONS----------	2024-10-14	SEANHAG7
/101	Servo drive system HV	2025-02-18	SEERMES
/102	Control cable HV	2025-02-18	SEERMES
/103	Control cable HV	2025-02-18	SEERMES
/104	Servo drive system HV	2025-02-18	SEERMES
/105	Servo drive system HV	2025-02-18	SEERMES
/106	Servo drive system HV	2025-02-18	SEERMES
/107	Servo drive system HV	2025-02-18	SEERMES
/108	Control cable HV	2025-02-18	SEERMES
/109	Servo drive system LV	2025-02-18	SEERMES
/110	Servo drive system LV	2025-02-18	SEERMES
/111	TPU connection	2025-02-18	SEERMES
/112	SMB connector overwiev	2024-10-14	SEANHAG7
/113	SMB connector	2025-02-18	SEERMES
/114	SMB connector	2025-02-18	SEERMES
/115	DeviceNet connector	2025-02-28	SEERMES
/116	Customer power/signal	2025-02-18	SEERMES
/117	Customer power/signal	2025-02-28	SEERMES
/118	Customer power/signal	2025-02-18	SEERMES
/119	Process flow sensor	2025-02-18	SEERMES
/120	Euromap67	2025-02-18	SEERMES
/121	Network options	2025-02-18	SEERMES
/122	Network options	2024-10-28	SEANHAG7
/123	Network options	2025-02-18	SEERMES
/124	3G/4G antenna panel connector	2025-02-18	SEERMES
/125	Wi-Fi antenna panel connector	2025-02-18	SEERMES
/140	----------APPLICATIONS----------	2024-09-05	SEANHAG7
/141	Multimove overview	2025-03-05	SEERMES
/142	MultiMove output, main controller	2025-03-05	SEERMES

We reserve all rights in this document and in the information contained therein. Reproduction, use or disclosure to third parties without express authority is strictly forbidden. © Copyright ABB

TABLE OF CONTENTS

PAGE	PAGE DESCRIPTION	Date	Edited by
/143	MultiMove input, additional controller 1	2025-03-05	SEERMES
/144	MultiMove output, additional controller 2	2025-03-05	SEERMES
/145	Vision, integrated cameras	2025-02-18	SEERMES
/146	Additional axis power, drive 1	2025-02-18	SEERMES
/147	Additional axis power, drive 1-3	2025-02-18	SEERMES
/148	Additional axis power, drive 4-6	2025-02-18	SEERMES
/149	Additional axis power, drive 3-5	2025-02-18	SEERMES
/150	WeldGuide Basic/Advanced	2025-02-18	SEERMES
/151	WeldGuide sensor	2025-02-18	SEERMES
/152	WeldGuide AMP sensor solid core	2025-02-18	SEERMES
/153	WeldGuide AMP sensor split core	2025-02-18	SEERMES
/154	WeldGuide Basic/Advanced 2nd	2025-02-18	SEERMES
/155	WeldGuide sensor, 2nd	2025-02-18	SEERMES
/156	WeldGuide AMP sensor solid core, 2nd	2025-02-18	SEERMES
/157	WeldGuide AMP sensor split core 2nd	2025-02-18	SEERMES
/158	Force control	2025-02-18	SEERMES
/159	Safety Module overview	2025-02-21	SEERMES
/160	Safety Module	2025-02-26	SEERMES
/500	----------FLOOR CABLES----------	2024-10-14	SEANHAG7
/501	Servo drive system IRB 390	2025-02-18	SEERMES
/502	Control cable IRB 390	2025-02-18	SEERMES
/503	SMB IRB 390/460/1600/2600/4600/5710/5720/6700/6710/6720/ 6730/6740/6790/7710/7720/8700	2025-02-18	SEERMES
/504	Drive and Control cable IRB 460/660/2600/4600/57X0 /6650S/6660/67X0/7600/77X0/8700	2025-02-18	SEERMES
/505	Customer power/signal IRB 460/660/2600/4600/6650S/6660/6700/7600/8700	2025-02-18	SEERMES
/506	Customer power/signal DeviceNet IRB 460/660/2600/4600/6650S/6660/6700/7600/8700	2025-02-18	SEERMES
/507	Customer power/signal DeviceNet IRB 460/660/2600/4600/6650S/6660/6700/7600/8700	2025-02-18	SEERMES
/508	Ethernet IRB 460/660/2600/4600/5710/5720/6650S/6660/ 6700/6710/6720/6730/6740/7600/7710/7720/8700	2025-02-18	SEERMES
/509	SMB IRB 660/2400/4400/6650S/6660/7600	2025-02-18	SEERMES
/510	Servo drive system IRB 1300	2025-02-18	SEERMES
/511	Control cable IRB 1300	2025-02-18	SEERMES
/512	SMB IRB 1300	2025-02-18	SEERMES
/513	Servo drive system IRB 1600/2400	2025-02-18	SEERMES
/514	Control cable IRB 1600/2400	2025-02-18	SEERMES

We reserve all rights in this document and in the information contained therein. Reproduction, use or disclosure to third parties without express authority is strictly forbidden. © Copyright ABB

TABLE OF CONTENTS

PAGE	PAGE DESCRIPTION	Date	Edited by
/515	Customer power/signal IRB 1600/2400	2025-02-18	SEERMES
/516	Servo drive system IRB 4400	2025-02-18	SEERMES
/517	Servo drive system IRB 4400	2025-02-18	SEERMES
/518	Customer power/signal IRB 4400	2025-02-18	SEERMES
/519	Customer power/signal IRB 5710/5720/6710/6720/6730/6740/7710/7720	2025-02-18	SEERMES
/520	Servo 1 axis IRB 460/660/2600/4600/5710/5720/6650S/6660/ 6700/6710/6720/6730/67407600/7710/7720/8700	2025-02-18	SEERMES
/521	Motor cooling axes IRB 6650S/6660/6700/7600	2025-02-18	SEERMES
/522	Flow sensor IRB 6790	2025-02-18	SEERMES
/523	Servo drive system IRB 8700	2025-02-18	SEERMES
/524	Control cable IRB 8700	2025-02-18	SEERMES

We reserve all rights in this document and in the information contained therein. Reproduction, use or disclosure to third parties without express authority is strictly forbidden. © Copyright ABB

Location	Option	Function name	Page	Location	Option	Function name	Page
A1:HVHP	Drivesystem *8	Power unit DSQC3070	16	T4:LV	Drivesystem B*	Main drive unit, LV DSQC3084	32
A1:HVLP	Drivesystem *9	Power unit DSQC3072	17	T5	3015-2	Process power supply DSQC609	85
A1:LVHP	Drivesystem *4	Power unit DSQC3069	15	T6	3049-1	ODVA DSQC634	86
A1:LVLP	Drivesystem *5	Power unit DSQC3071	18	T10	3015-3	Process power supply DSQC1102	87
A2	Baseline	Main computer DSQC1095	41	T41	3062-1	Additional drive unit DSQC3065	33
A2.K1	Baseline	Power distribution board DSQC1085	42	T42	3062-1	=	34
A2.K2	Baseline	DeviceNet M/S DSQC1089	43	T43	3062-1	=	35
A2.K3	Baseline	Processor board DSQC1086	44	T44	3062-1	=	36
A2.K4	Baseline	Ethernet switch DSQC1088	45	T45	3062-1	=	37
A2.K5	Baseline	Safety board DSQC1087	46	T46	3062-1	=	38
A1.R1	Baseline	Bleeder resistor	15	T11	3071-2	Power supply unit	14
B1	3041-1	Conveyor tracker module DSQC2000	73	X4	Baseline	TPU-connection	111
B4	Baseline	Temp. sensor	41	X24	Baseline	Local Management Port	83
B4	Baseline	=	47	X0	3008-1/2/3	Mains connection	12
F1	3008-3	Mains fuse	13	X1	Dep. on robot	Manipulator axis	103
G6	3004-2	Heat exchanger	82	X1:HV	Dep. on robot	Motor connection	101
G5	Baseline	Internal fan	81	X1:LV	Dep. on robot	Motor connection LV	109
G1	Baseline	Cooling fan Ch.1	81	X2	Dep. on Robot	SMB connector	113
G2	Baseline	Cooling fan Ch.2	81	X3	3062-1	=	114
K3.1	3037-1	Master Safe I/O unit DSQC1042	65	X7	3062-1	Additional axis power, drive 1	146
K4	3014-1	Ethernet switch DSQC1035	68	X8	3062-1	Additional axis power, drive 4-6	148
K5.1	3032-1	Header 16DI/16DO DSQC1030	61	X17	3056-1	DeviceNet connector	115
K5.x:ANL	3034-1	Add on unit Analog DSQC1032	62	X41.1	3060-1	Network connectors	121
K5.x:DIG	3033-1	Add on unit Digital DSQC1031	64	X41.2	3060-1	=	121
K5.x:REL	3035-1	Add on unit Relay DSQC1033	63	X42.1	3061-1	=	122
K7	3013-1	Service connection unit DSQ1041	72	X42.2	3061-1	=	122
K7:3G	3013-3	Service connection unit DSQC1039	69	X42.3	3061-1	=	122
K7:4G	3013-5/6/7	Service connection unit DSQC1093/1093A/1101	70	X42.4	3061-1	=	122
K7:WiFi	3013-2	Service connection unit DSQC1040	71	X42.5	3061-1	=	122
K9.1	3420-1/3421-1	WeldGuide Basic/Advanced	150	X44	3013-1	=	123
K9.1.2	3420-1/3421-1	2nd WeldGuide Basic/Advanced	154	X45:3G/4G	3013-5/6	3G/4G antenna panel connector	124
K11.1	3032-1	2nd Header 16DI/16DO DSQC1030	66	X45:WiFi	3013-2	Wi-Fi antenna panel connector	125
K11.x:ANL	3034-1	Add on unit Analog DSQC1032	62	X54	3213-2	Euromap 67	120
K11.x:DIG	3033-1	Add on unit Digital DSQC1031	64	X54Z	3213-2	=	120
K11.x:REL	3035-1	Add on unit Relay DSQC1033	63	X63	3347-1	Process flow sensor	119
K12.1	3037-1	2nd Master Safe I/O unit DSQC1042	67	X66.1	3420-1/3421-1	WeldGuide sensor	151
K2	3102-3	Robot signal exchange proxy DSQC3037	47	X66.2	3420-1/3421-1	=	151
P1	3053-1	HMIP Basic Unit DSQC2021	74	X67.1	3420-1/3421-1	2nd WeldGuide sensor	155
PE	Baseline	Protective ground	84	X67.2	3420-1/3421-1	=	155
Q0	Baseline	Mains switch	11	X81	3055-1	Distributed process control	116
T4:HV	Drivesystem E*	Main drive unit, HV DSQC3062	31	X91	3055-2	=	118

We reserve all rights in this document and in the information contained therein. Reproduction, use or disclosure to third parties without express authority is strictly forbidden. © Copyright 2017 ABB

Location	Option	Function name	Page	Location	Option	Function name	Page
X92	3055-2	Distributed process control	118				
X201	3055-1	Customer Power/ Customer signal	116				
X202	3055-2	Customer Power	118				
X203	3055-2	=	118				
X331	3102-1/2/3	Multimove output	142				
X332	3102-1/2/3	=	142				
X102	3015-3	24VDC terminal block	87				
X103	3015-2/3049-1	=	85				
X331	3102-1/2/3	Multimove output add. cont.	144				
X332	3102-1/2/3	=	144				
X333	3102-3	Multimove input add. cont.	143				
X334	3102-3	=	143				

We reserve all rights in this document and in the information contained therein.Reproduction, use or disclosure to third parties without express authority is strictly forbidden. © Copyright 2017 ABB

We reserve all rights in this document and in the information contained therein. Reproduction, use or disclosure to third parties without express authority is strictly forbidden. © Copyright ABB

POWER

Latest revision: See revision text		ABB	Lab/Office: RA/RDP	OmniCore V400XT ----------POWER----------	Status: APPROVED	Plant: = Location: + Sublocation: +	
Prepared by, date: E. Mesaros	Approved by, date: M. Wadstein 2025-03-10				Document no. 3HAC082020-008	Rev. Ind 03	Page 10 Next 11 Total 142

We reserve all rights in this document and in the information contained therein. Reproduction, use or disclosure to third parties without express authority is strictly forbidden. © Copyright ABB

+U1

Latest revision: See revision text		ABB	Lab/Office: RA/RDP	OmniCore V400XT Power input	Status: APPROVED	Plant: = Location: + Sublocation: +
Prepared by, date: E. Mesaros	Approved by, date: M. Wadstein 2025-03-10				Document no. 3HAC082020-008	Rev. Ind 03
						Page 11 Next 12 Total 142

We reserve all rights in this document and in the information contained therein. Reproduction, use or disclosure to third parties without express authority is strictly forbidden. © Copyright ABB

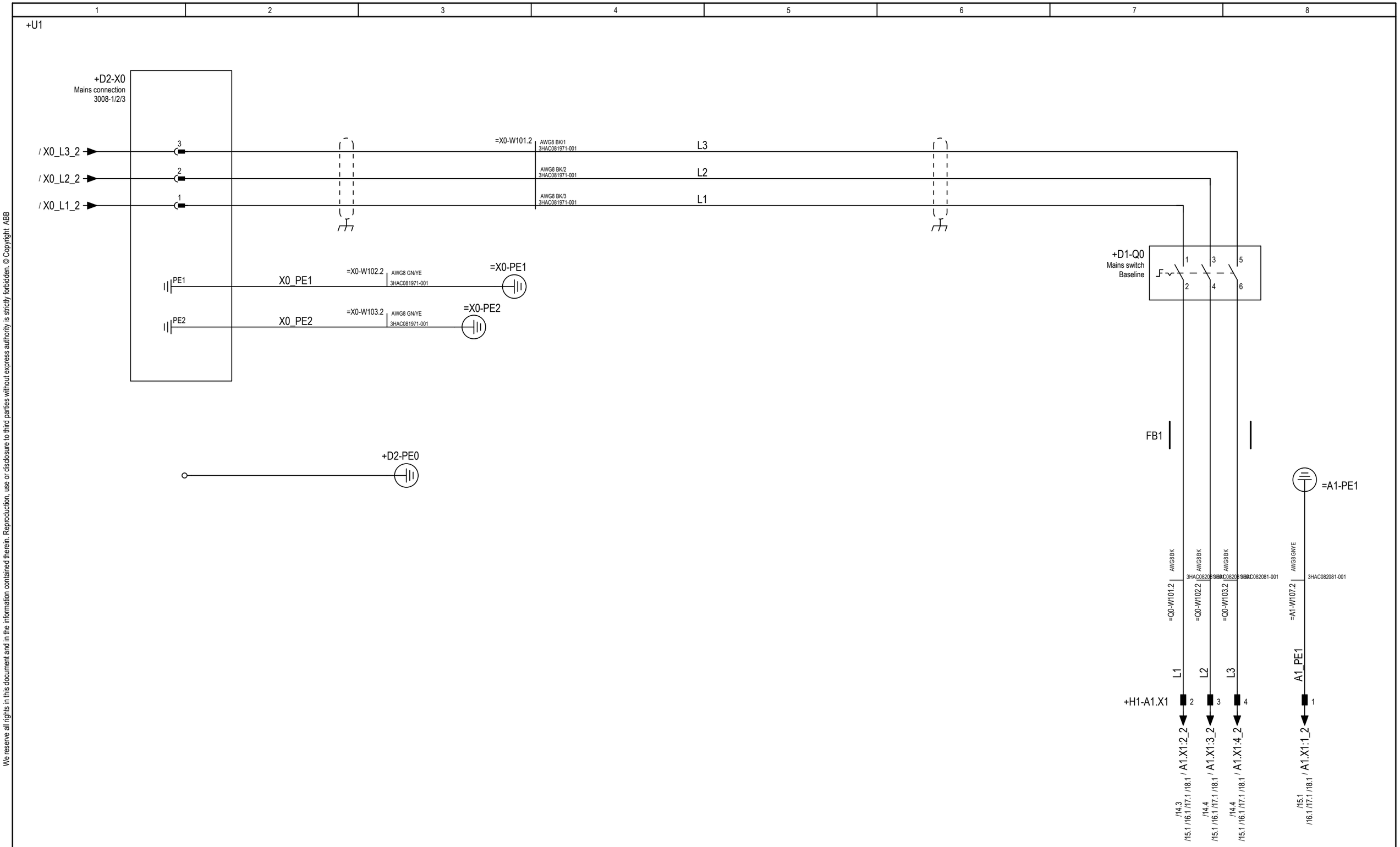

Latest revision: See revision text		Lab/Office: RA/RDP	OmniCore V400XT Power input	Status: APPROVED	Plant: = Location: + Sublocation: +
Prepared by, date: E. Mesaros	Approved by, date: M. Wadstein 2025-03-10			Document no. 3HAC082020-008	Rev. Ind 03

Page	12
Next	13
Total	142

We reserve all rights in this document and in the information contained therein. Reproduction, use or disclosure to third parties without express authority is strictly forbidden. © Copyright ABB

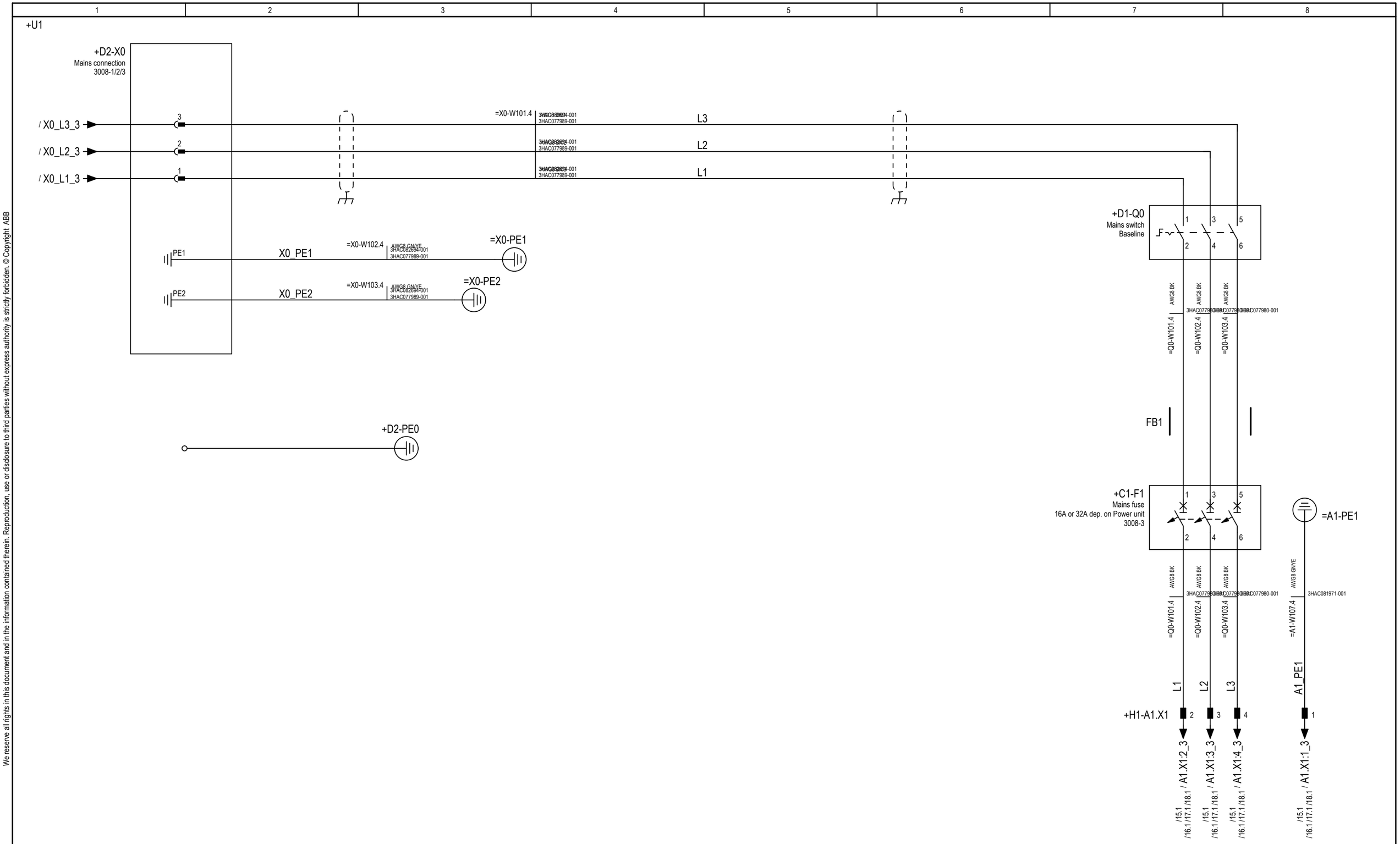

Latest revision: See revision text		Lab/Office: RA/RDP	OmniCore V400XT Power input	Status: APPROVED	Plant: = Location: + Sublocation: +
Prepared by, date: E. Mesaros	Approved by, date: M. Wadstein 2025-03-10			Document no. 3HAC082020-008	Rev. Ind 03
					Page 13 Next 14 Total 142

We reserve all rights in this document and in the information contained therein. Reproduction, use or disclosure to third parties without express authority is strictly forbidden. © Copyright ABB

+U1

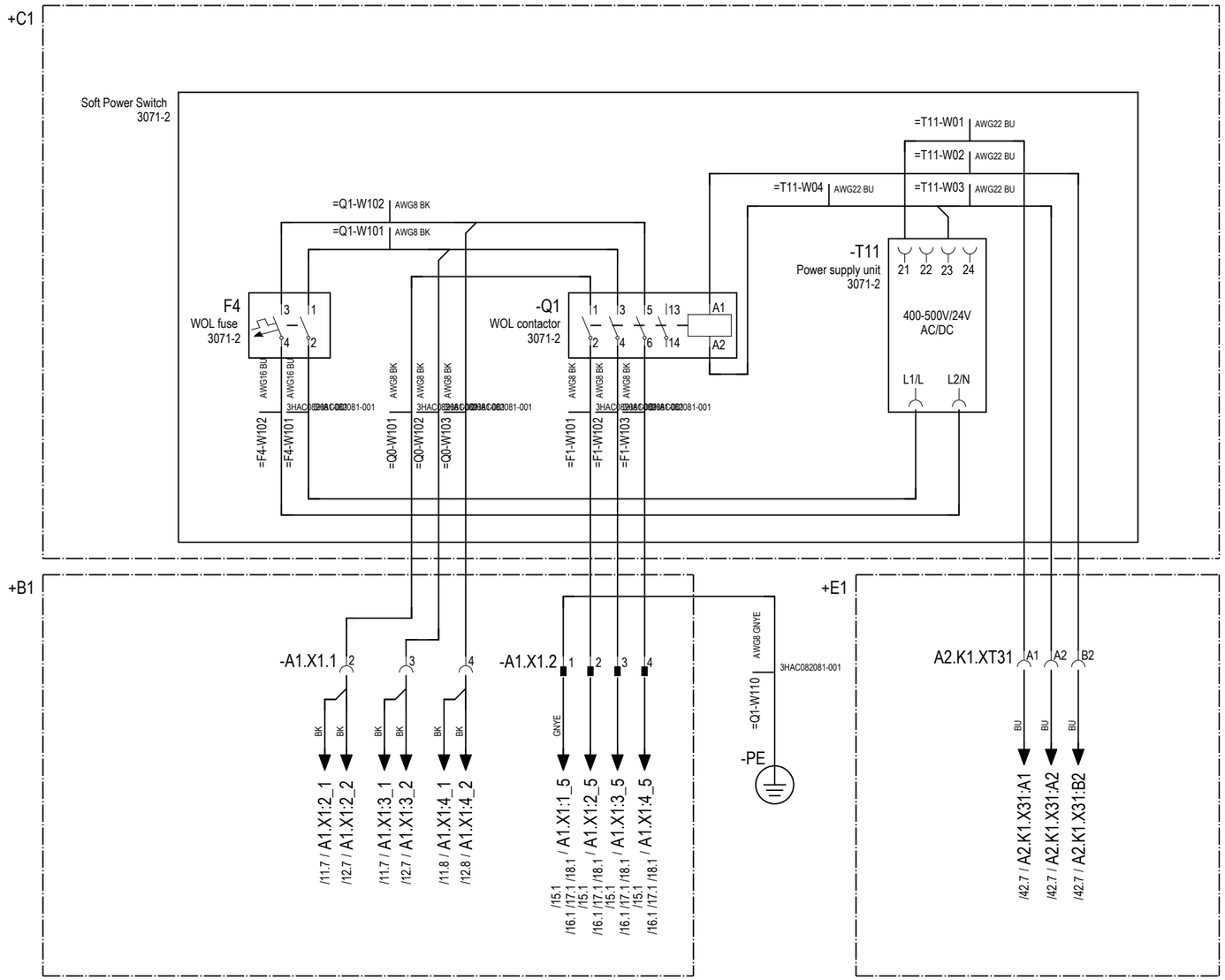

1 — 2
3 — 4
5 — 6
13 — 14

Latest revision: See revision text		Lab/Office: RA/RDP	OmniCore V400XT Soft power switch	Status: APPROVED	Plant: = Location: + Sublocation: +	
				Document no. 3HAC082020-008	Rev. Ind 03	Page 14 Next 15 Total 142
Prepared by, date: E. Mesaros	Approved by, date: M. Wadstein 2025-03-10					

We reserve all rights in this document and in the information contained therein. Reproduction, use or disclosure to third parties without express authority is strictly forbidden. © Copyright ABB

+U1

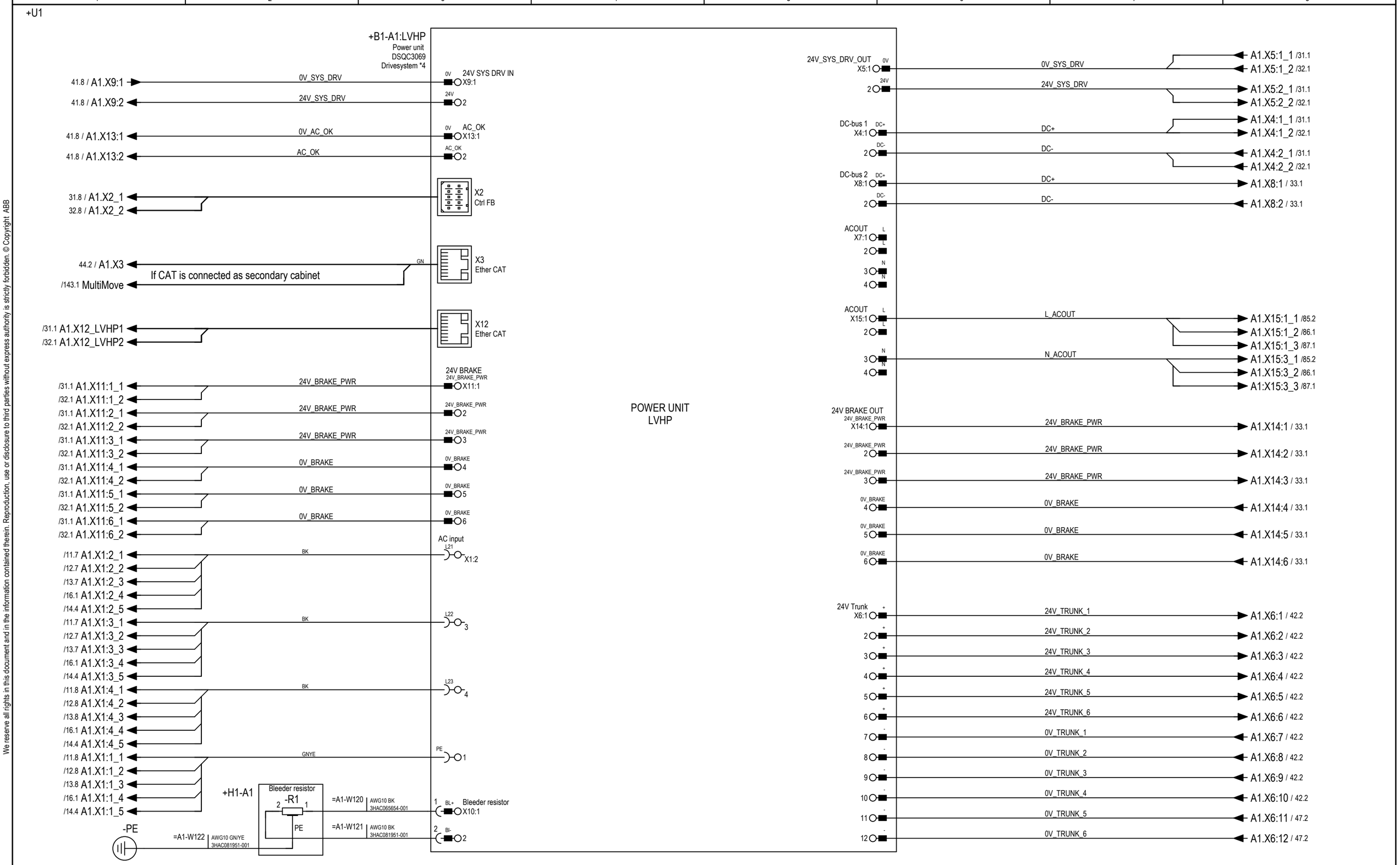

Latest revision: See revision text		Lab/Office: RA/RDP	OmniCore V400XT Power unit LVHP	Status: APPROVED	Plant: = Location: + Sublocation: +
Prepared by, date: E. Mesaros	Approved by, date: M. Wadstein 2025-03-10			Document no. 3HAC082020-008	Rev. Ind 03

We reserve all rights in this document and in the information contained therein. Reproduction, use or disclosure to third parties without express authority is strictly forbidden. © Copyright ABB

+U1

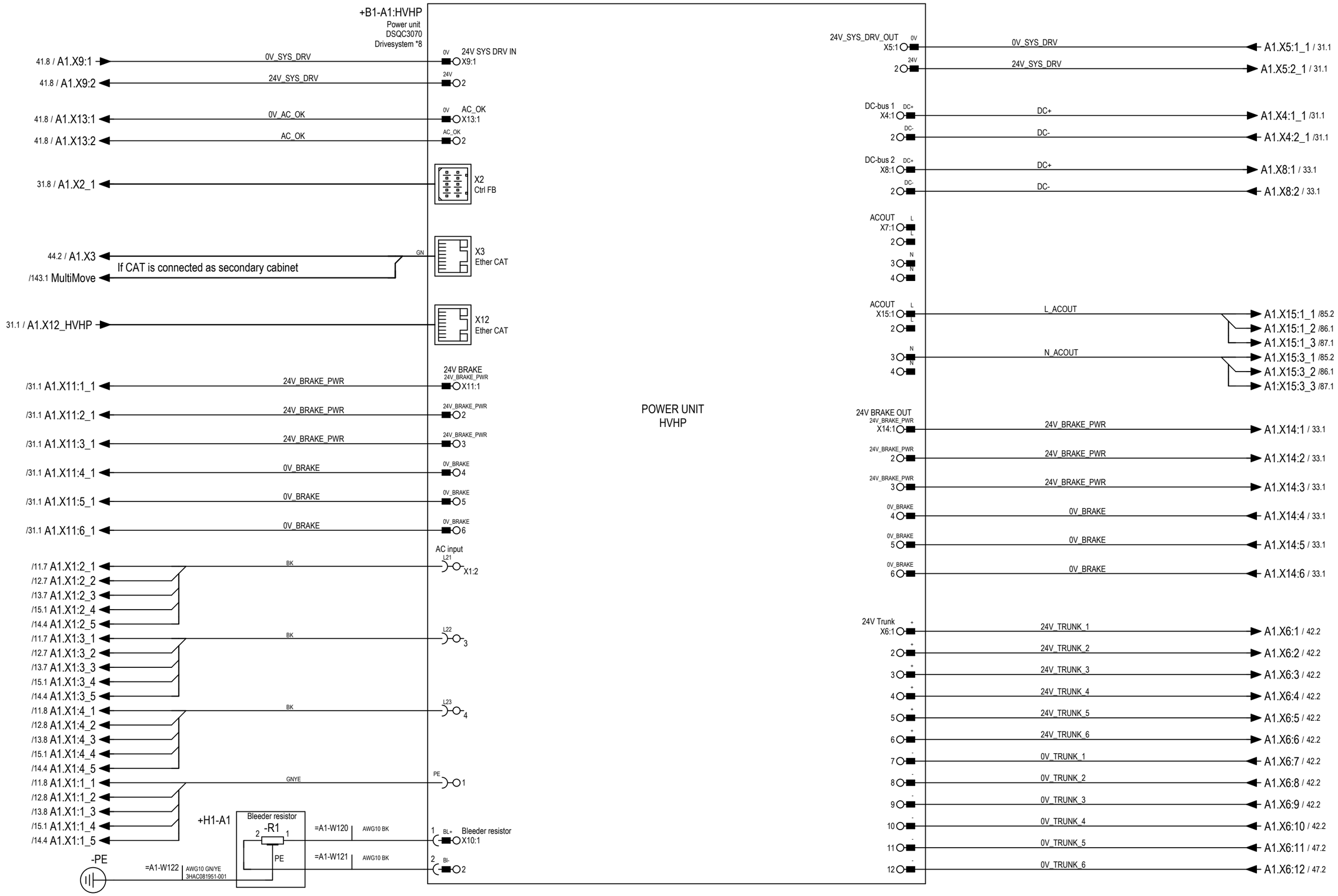

Latest revision: See revision text		Lab/Office: RA/RDP	OmniCore V400XT Power unit HVHP	Status: APPROVED	Plant: = Location: + Sublocation: +	
Prepared by, date: E. Mesaros	Approved by, date: M. Wadstein 2025-03-10			Document no. 3HAC082020-008	Rev. Ind 03	Page 16 Next 17 Total 142

We reserve all rights in this document and in the information contained therein. Reproduction, use or disclosure to third parties without express authority is strictly forbidden. © Copyright ABB

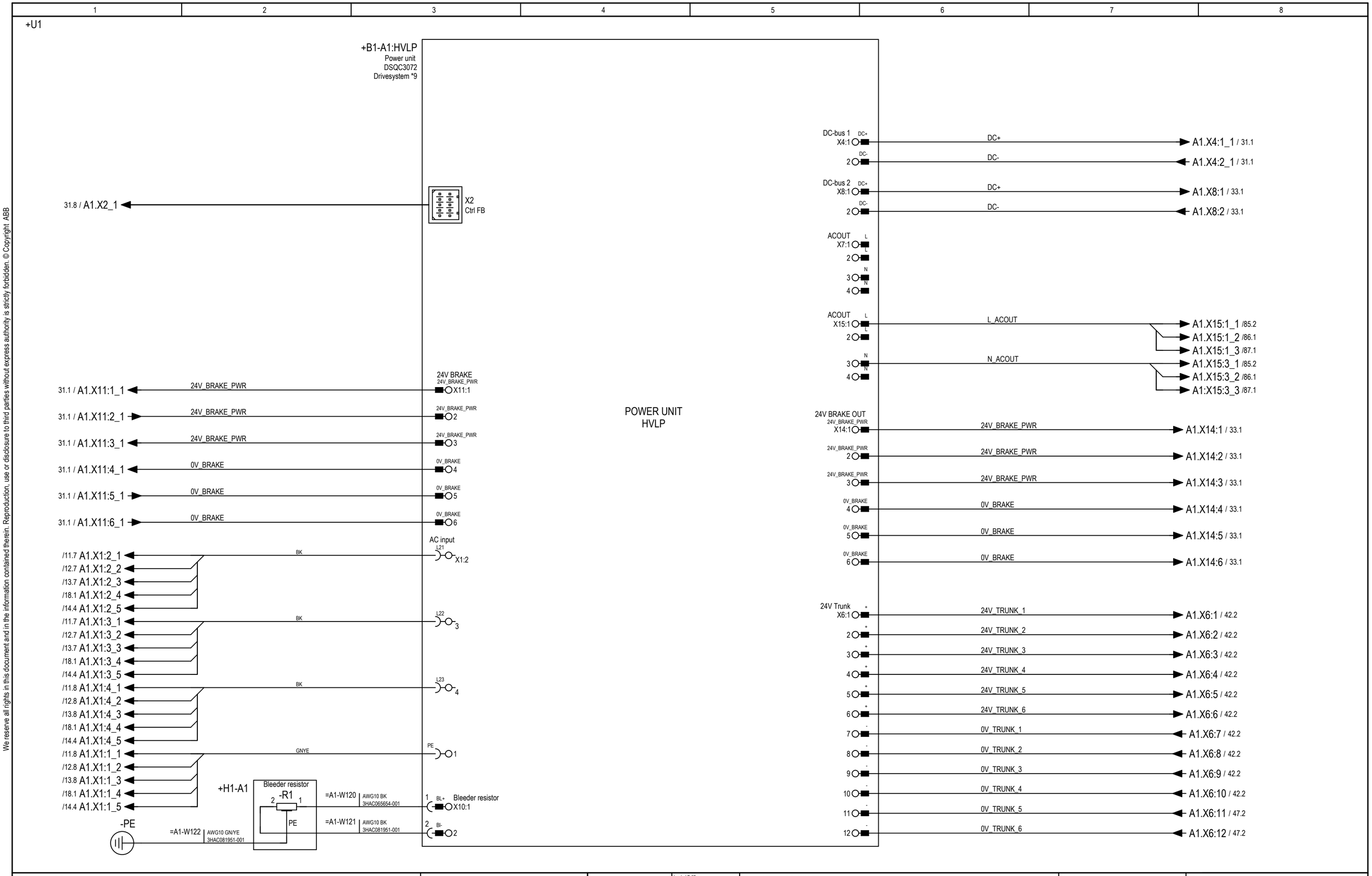

Latest revision: See revision text		Lab/Office: RA/RDP	OmniCore V400XT Power unit HVLP	Status: APPROVED	Plant: = Location: + Sublocation: +
Prepared by, date: E. Mesaros	Approved by, date: M. Wadstein 2025-03-10			Document no. 3HAC082020-008	Rev. Ind 03

We reserve all rights in this document and in the information contained therein. Reproduction, use or disclosure to third parties without express authority is strictly forbidden. © Copyright ABB

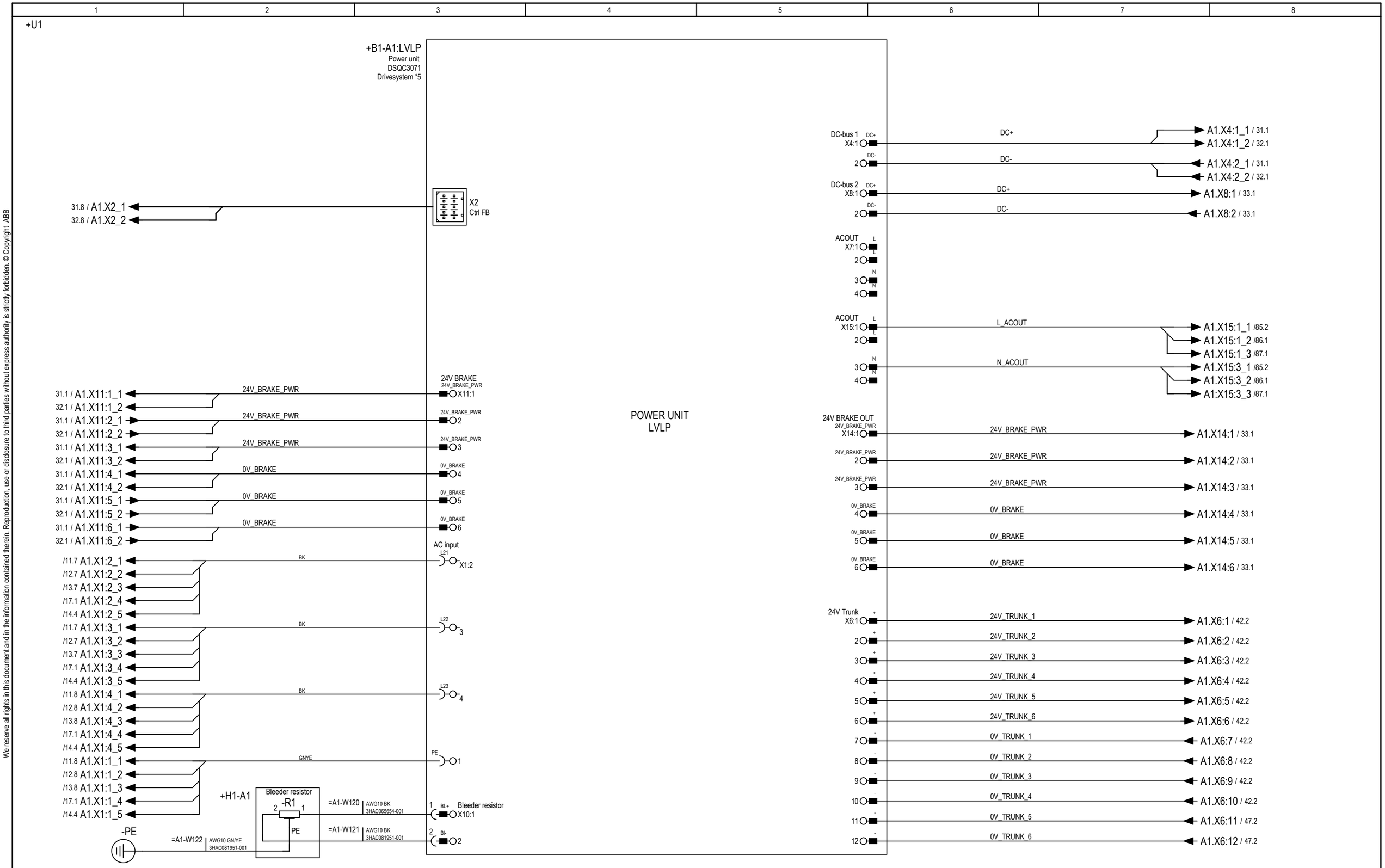

Latest revision: See revision text		Lab/Office: RA/RDP	OmniCore V400XT Power unit LVLP	Status: APPROVED	Plant: = Location: + Sublocation: +
Prepared by, date: E. Mesaros	Approved by, date: M. Wadstein 2025-03-10			Document no. 3HAC082020-008	Rev. Ind 03
					Page 18 Next 30 Total 142

We reserve all rights in this document and in the information contained therein. Reproduction, use or disclosure to third parties without express authority is strictly forbidden. © Copyright ABB

DRIVE

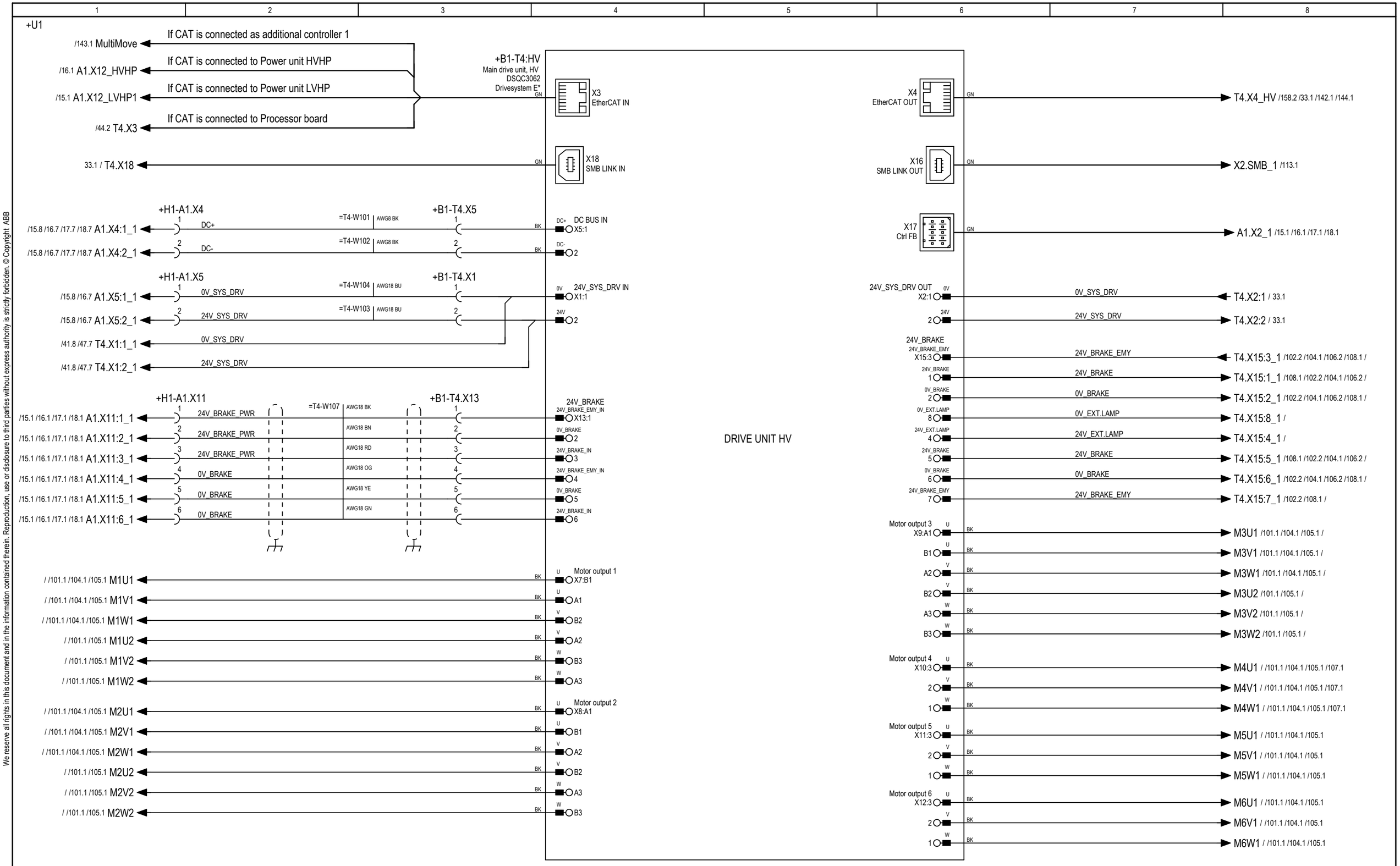

We reserve all rights in this document and in the information contained therein. Reproduction, use or disclosure to third parties without express authority is strictly forbidden. © Copyright ABB

Latest revision: See revision text	ABB	Lab/Office: RA/RDP	OmniCore V400XT Drive unit HV	Status: APPROVED	Plant: = Location: + Sublocation: +
Prepared by, date: E. Mesaros	Approved by, date: M. Wadstein 2025-03-10			Document no. 3HAC082020-008	Rev. Ind 03
					Page 31 Next 32 Total 142

We reserve all rights in this document and in the information contained therein. Reproduction, use or disclosure to third parties without express authority is strictly forbidden. © Copyright ABB

+U1

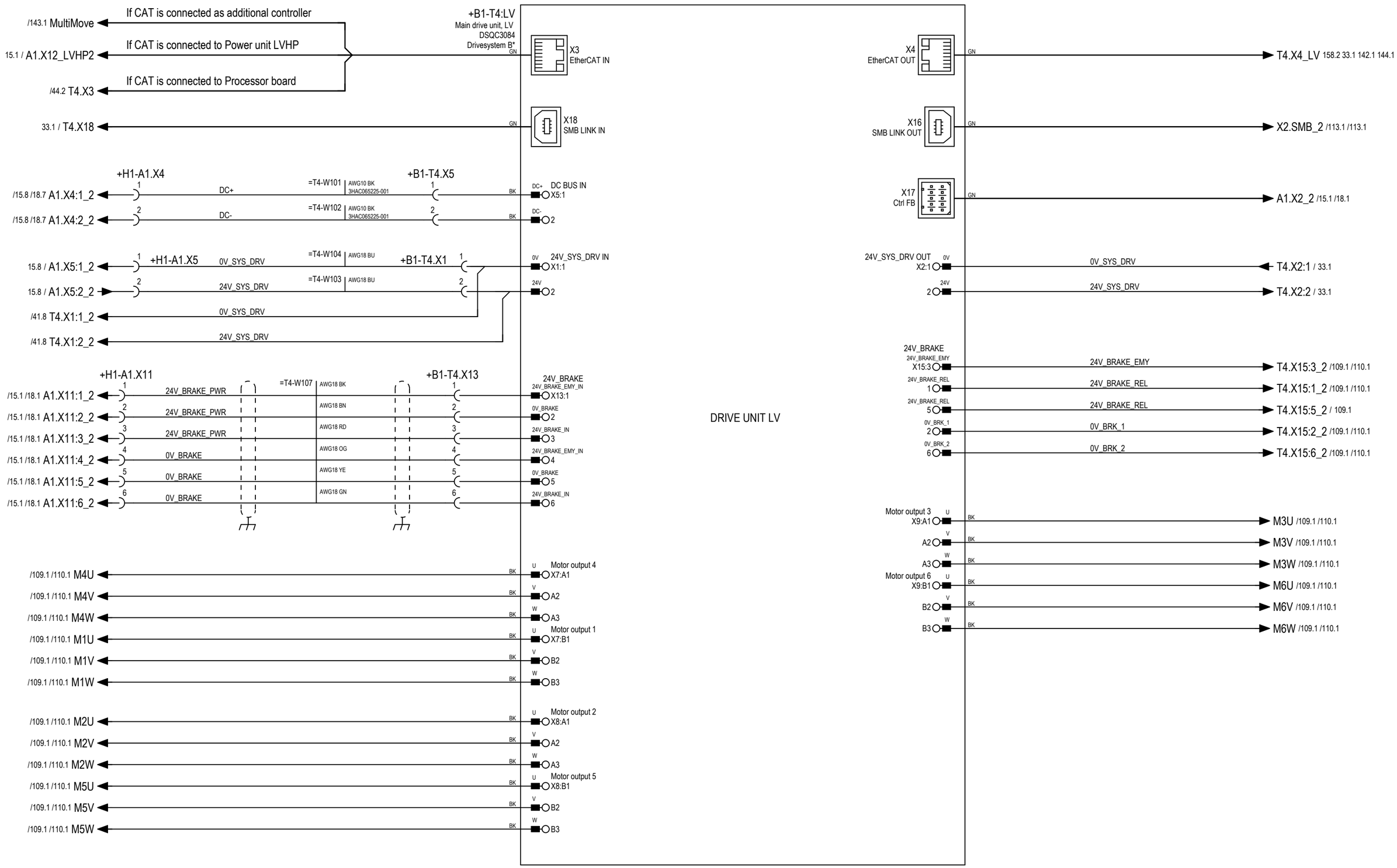

Latest revision: See revision text		Lab/Office: RA/RDP	OmniCore V400XT Drive unit LV	Status: APPROVED	Plant: = Location: + Sublocation: +	
Prepared by, date: E. Mesaros	Approved by, date: M. Wadstein 2025-03-10			Document no. 3HAC082020-008	Rev. Ind 03	Page 32 Next 33 Total 142

We reserve all rights in this document and in the information contained therein. Reproduction, use or disclosure to third parties without express authority is strictly forbidden. © Copyright ABB

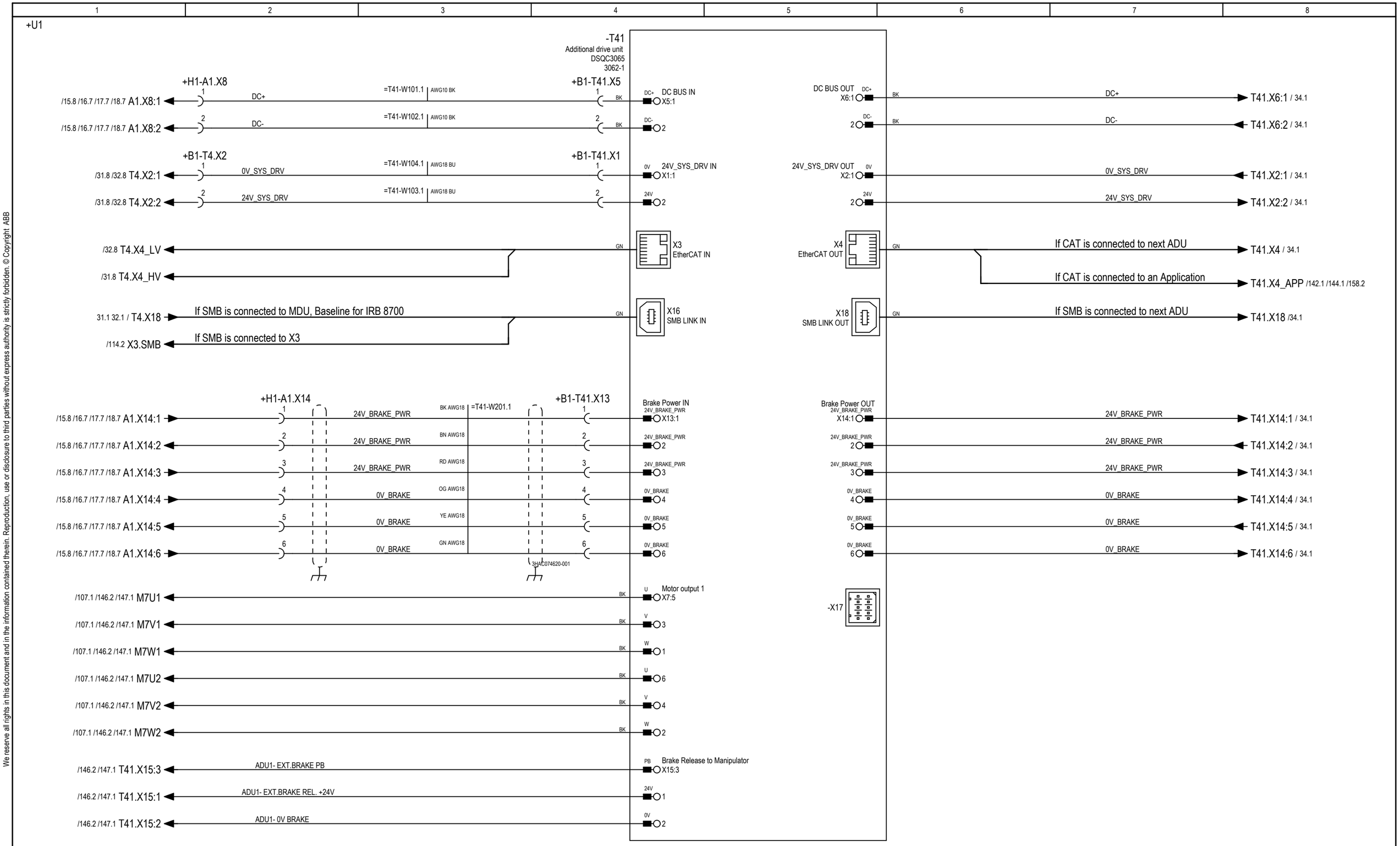

Latest revision: See revision text		Lab/Office: RA/RDP	OmniCore V400XT Additional drive unit 1	Status: APPROVED	Plant: = Location: + Sublocation: +
Prepared by, date: E. Mesaros	Approved by, date: M. Wadstein 2025-03-10			Document no. 3HAC082020-008	Rev. Ind 03

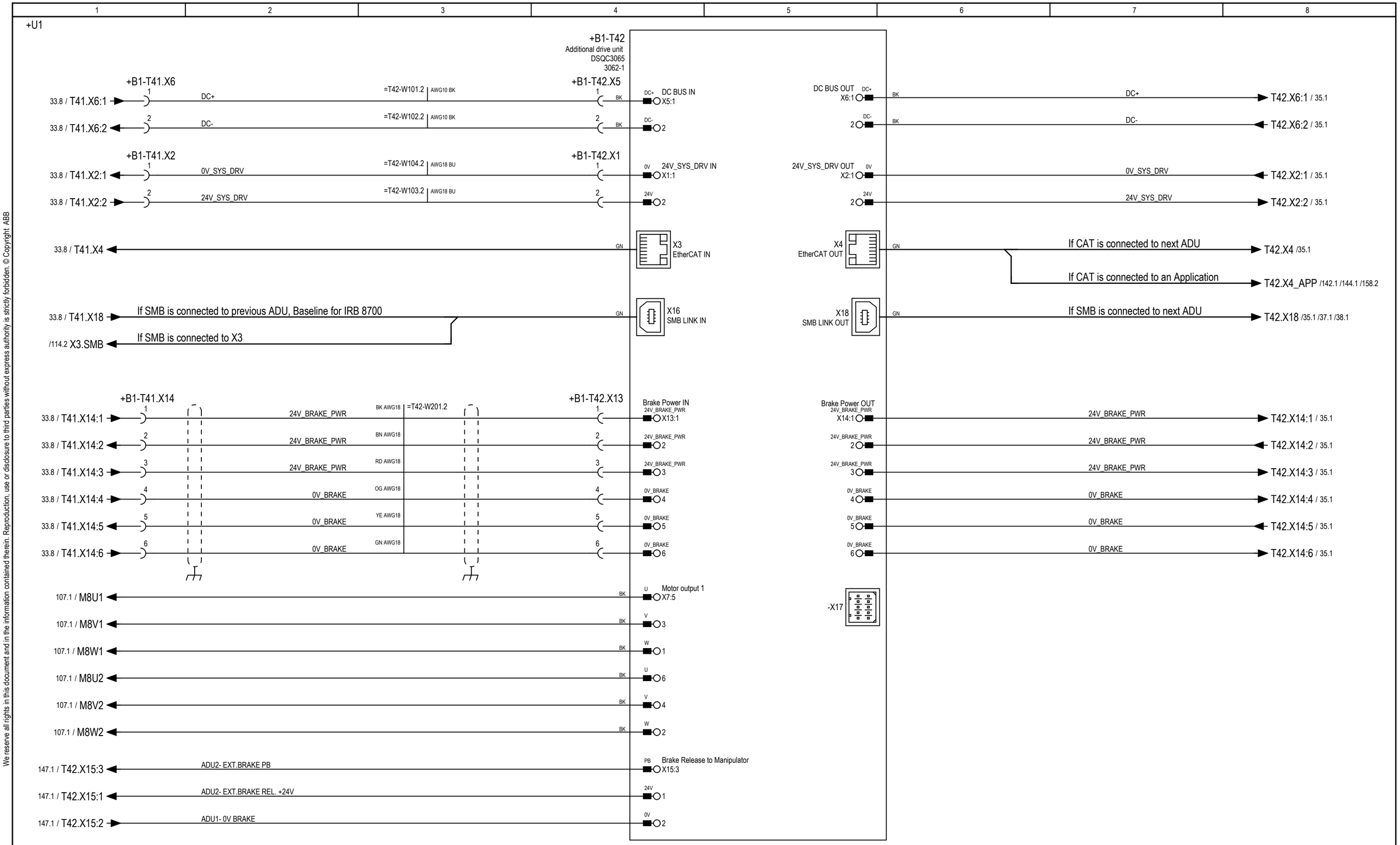

We reserve all rights in this document and in the information contained therein. Reproduction, use or disclosure to third parties without express authority is strictly forbidden. © Copyright ABB

Latest revision: See revision text	ABB	Lab/Office: RA/RDP	OmniCore V400XT Additional drive unit 2	Status: APPROVED	Plant: = Location: + Sublocation: +
Prepared by, date: E. Mesaros	Approved by, date: M. Wadstein 2025-03-10			Document no. 3HAC082020-008	Rev. Ind 03

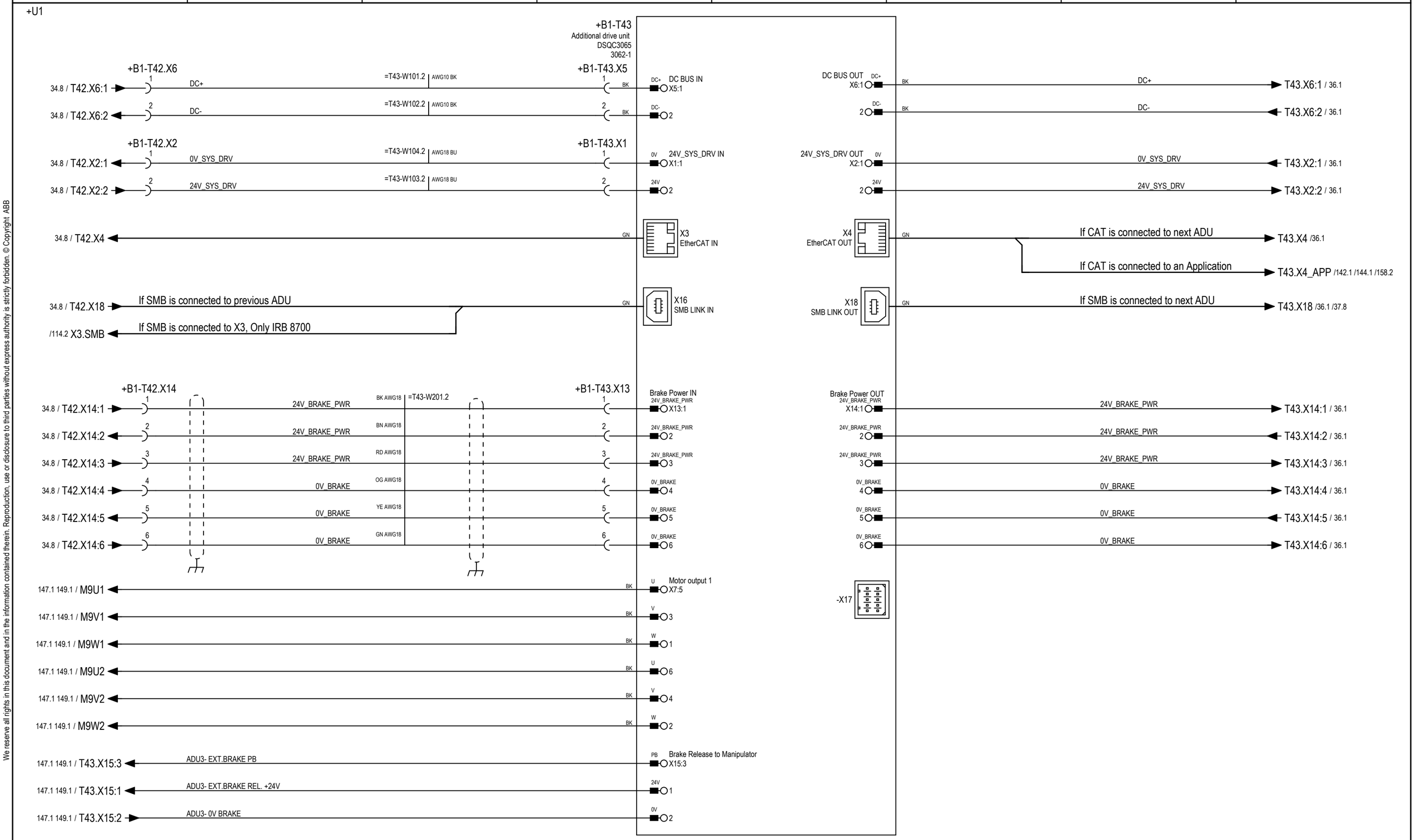

We reserve all rights in this document and in the information contained therein. Reproduction, use or disclosure to third parties without express authority is strictly forbidden. © Copyright ABB

Latest revision: See revision text	ABB	Lab/Office: RA/RDP	OmniCore V400XT Additional drive unit 3	Status: APPROVED	Plant: = Location: + Sublocation: +
Prepared by, date: E. Mesaros	Approved by, date: M. Wadstein 2025-03-10			Document no. 3HAC082020-008	Rev. Ind 03

We reserve all rights in this document and in the information contained therein. Reproduction, use or disclosure to third parties without express authority is strictly forbidden. © Copyright ABB

+U1

+B1-T44
Additional drive unit
DSQC3065
3062-1

35.8 / T43.X6:1	+B1-T41.X6 1	DC+	=T44-W101.2	AWG10 BK	+B1-T44.X5 1	BK	DC+	DC BUS IN X5:1	DC BUS OUT X6:1 DC+	BK	DC+	T44.X6:1 / 37.1
35.8 / T43.X6:2	2	DC-	=T44-W102.2	AWG10 BK	2	BK	DC-	2	2 DC-	BK	DC-	T44.X6:2 / 37.1
35.8 / T43.X2:1	+B1-T41.X2 1	0V_SYS_DRV	=T44-W104.2	AWG18 BU	+B1-T44.X1 1		0V	24V_SYS_DRV IN X1:1	24V_SYS_DRV OUT X2:1 0V		0V_SYS_DRV	T44.X2:1 / 37.1
35.8 / T43.X2:2	2	24V_SYS_DRV	=T44-W103.2	AWG18 BU	2		24V	2	2 24V		24V_SYS_DRV	T44.X2:2 / 37.1
35.8 / T43.X4						GN		X3 EtherCAT IN	X4 EtherCAT OUT	GN	If CAT is connected to next ADU	T44.X4 /37.1
											If CAT is connected to an Application	T44.X4_APP /142.1 /144.1
35.8 / T43.X18		If SMB is connected to previous ADU				GN		X16 SMB LINK IN	X18 SMB LINK OUT	GN	If SMB is connected to next ADU	T44.X18
35.8 / T43.X14:1	+B1-T41.X14 1	24V_BRAKE_PWR	BK AWG18	=T44-W201.2	+B1-T44.X13 1		24V_BRAKE_PWR	Brake Power IN X13:1	Brake Power OUT X14:1 24V_BRAKE_PWR		24V_BRAKE_PWR	T44.X14:1 / 37.1
35.8 / T43.X14:2	2	24V_BRAKE_PWR	BN AWG18		2		24V_BRAKE_PWR	2	2 24V_BRAKE_PWR		24V_BRAKE_PWR	T44.X14:2 / 37.1
35.8 / T43.X14:3	3	24V_BRAKE_PWR	RD AWG18		3		24V_BRAKE_PWR	3	3 24V_BRAKE_PWR		24V_BRAKE_PWR	T44.X14:3 / 37.1
35.8 / T43.X14:4	4	0V_BRAKE	OG AWG18		4		0V_BRAKE	4	4 0V_BRAKE		0V_BRAKE	T44.X14:4 / 37.1
35.8 / T43.X14:5	5	0V_BRAKE	YE AWG18		5		0V_BRAKE	5	5 0V_BRAKE		0V_BRAKE	T44.X14:5 / 37.1
35.8 / T43.X14:6	6	0V_BRAKE	GN AWG18		6		0V_BRAKE	6	6 0V_BRAKE		0V_BRAKE	T44.X14:6 / 37.1
/149.1 /148.1 M10U1						BK	U	Motor output 1 X7:5	-X17			
/148.1 /149.1 M10V1						BK	V	3				
/148.1 /149.1 M10W1						BK	W	1				
/148.1 /149.1 M10U2						BK	U	6				
/148.1 /149.1 M10V2						BK	V	4				
/148.1 /149.1 M10W2						BK	W	2				
148.1 149.1 / T44.X15:3		ADU2- EXT.BRAKE PB					PB	Brake Release to Manipulator X15:3				
148.1 149.1 / T44.X15:1		ADU2- EXT.BRAKE REL. +24V					24V	1				
148.1 149.1 / T44.X15:2		ADU1- 0V BRAKE					0V	2				

Latest revision: See revision text	ABB	Lab/Office: RA/RDP	OmniCore V400XT Additional drive unit 4	Status: APPROVED	Plant: = Location: + Sublocation: +
Prepared by, date: E. Mesaros	Approved by, date: M. Wadstein 2025-03-10			Document no. 3HAC082020-008	Rev. Ind 03
					Page 36 Next 37 Total 142

We reserve all rights in this document and in the information contained therein. Reproduction, use or disclosure to third parties without express authority is strictly forbidden. © Copyright ABB

+U1

+B1-T45
Additional drive unit
DSQC3065
3062-1

36.8 / T44.X6:1	+B1-T41.X6 1	DC+	=T45-W101.2	AWG10 BK	+B1-T45.X5 1	BK	DC+ DC BUS IN X5:1	DC BUS OUT DC+ X6:1	BK DC+ T45.X6:1 / 38.1
36.8 / T44.X6:2	2	DC-	=T45-W102.2	AWG10 BK	2	BK	DC- 2	DC- 2	BK DC- T45.X6:2 / 38.1
36.8 / T44.X2:1	+B1-T41.X2 1	0V_SYS_DRV	=T45-W104.2	AWG18 BU	+B1-T45.X1 1		0V 24V_SYS_DRV IN X1:1	24V_SYS_DRV OUT 0V X2:1	0V_SYS_DRV T45.X2:1 / 38.1
36.8 / T44.X2:2	2	24V_SYS_DRV	=T45-W103.2	AWG18 BU	2		24V 2	24V 2	24V_SYS_DRV T45.X2:2 / 38.1
36.8 / T44.X4						GN	X3 EtherCAT IN	X4 EtherCAT OUT	GN If CAT is connected to next ADU T45.X4 /38.1
									If CAT is connected to an Application T45.X4_APP /142.1 /144.1
34.8 / T42.X18		If SMB is connected to previous ADU				GN	X16 SMB LINK IN	X18 SMB LINK OUT	GN If SMB is connected to next ADU T43.X18 /35.8
36.8 / T44.X14:1	+B1-T41.X14 1	24V_BRAKE_PWR	BK AWG18	=T45-W201.2	+B1-T45.X13 1		Brake Power IN 24V_BRAKE_PWR X13:1	Brake Power OUT 24V_BRAKE_PWR X14:1	24V_BRAKE_PWR T45.X14:1 / 38.1
36.8 / T44.X14:2	2	24V_BRAKE_PWR	BN AWG18		2		24V_BRAKE_PWR 2	24V_BRAKE_PWR 2	24V_BRAKE_PWR T45.X14:2 / 38.1
36.8 / T44.X14:3	3	24V_BRAKE_PWR	RD AWG18		3		24V_BRAKE_PWR 3	24V_BRAKE_PWR 3	24V_BRAKE_PWR T45.X14:3 / 38.1
36.8 / T44.X14:4	4	0V_BRAKE	OG AWG18		4		0V_BRAKE 4	0V_BRAKE 4	0V_BRAKE T45.X14:4 / 38.1
36.8 / T44.X14:5	5	0V_BRAKE	YE AWG18		5		0V_BRAKE 5	0V_BRAKE 5	0V_BRAKE T45.X14:5 / 38.1
36.8 / T44.X14:6	6	0V_BRAKE	GN AWG18		6		0V_BRAKE 6	0V_BRAKE 6	0V_BRAKE T45.X14:6 / 38.1
/148.1 /149.1 M11U1						BK	U Motor output 1 X7:5	-X17	
/148.1 /149.1 M11V1						BK	V 3		
/148.1 /149.1 M11W1						BK	W 1		
/148.1 /149.1 M11U2						BK	U 6		
/148.1 /149.1 M11V2						BK	V 4		
/148.1 /149.1 M11W2						BK	W 2		
148.1 149.1 / T45.X15:3		ADU2- EXT.BRAKE PB				PB	Brake Release to Manipulator X15:3		
148.1 149.1 / T45.X15:1		ADU2- EXT.BRAKE REL. +24V				24V	1		
148.1 149.1 / T45.X15:2		ADU1- 0V BRAKE				0V	2		

Latest revision: See revision text	ABB	Lab/Office: RA/RDP	OmniCore V400XT Additional drive unit 5	Status: APPROVED	Plant: = Location: + Sublocation: +
Prepared by, date: E. Mesaros	Approved by, date: M. Wadstein 2025-03-10			Document no. 3HAC082020-008	Rev. Ind 03
					Page 37 Next 38 Total 142

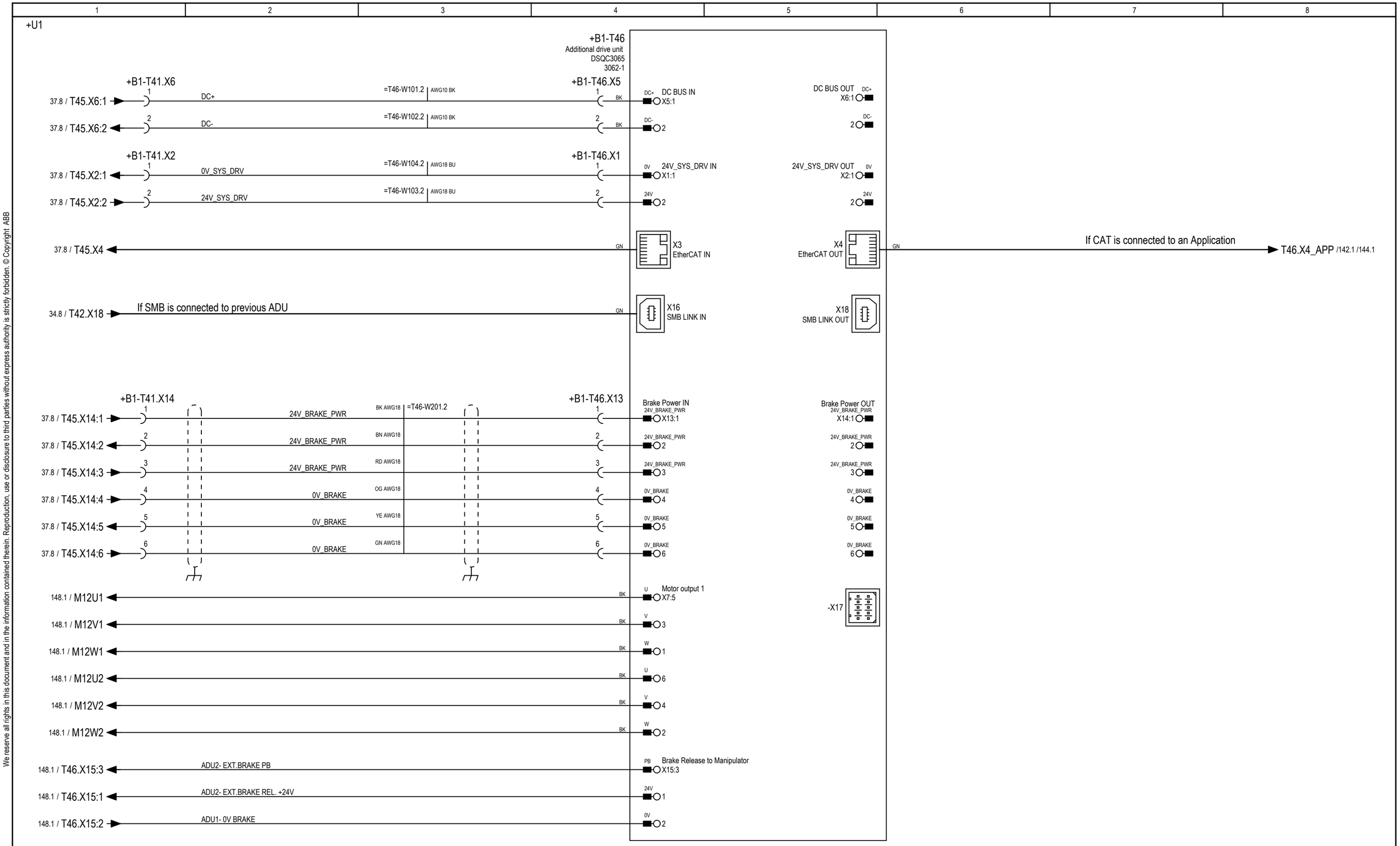

We reserve all rights in this document and in the information contained therein. Reproduction, use or disclosure to third parties without express authority is strictly forbidden. © Copyright ABB

Latest revision: See revision text	ABB	Lab/Office: RA/RDP	OmniCore V400XT Additional drive unit 6	Status: APPROVED	Plant: = Location: + Sublocation: +
Prepared by, date: E. Mesaros	Approved by, date: M. Wadstein 2025-03-10			Document no. 3HAC082020-008	Rev. Ind 03
					Page 38 Next 40 Total 142

We reserve all rights in this document and in the information contained therein. Reproduction, use or disclosure to third parties without express authority is strictly forbidden. © Copyright ABB

LOGIC

We reserve all rights in this document and in the information contained therein. Reproduction, use or disclosure to third parties without express authority is strictly forbidden. © Copyright ABB

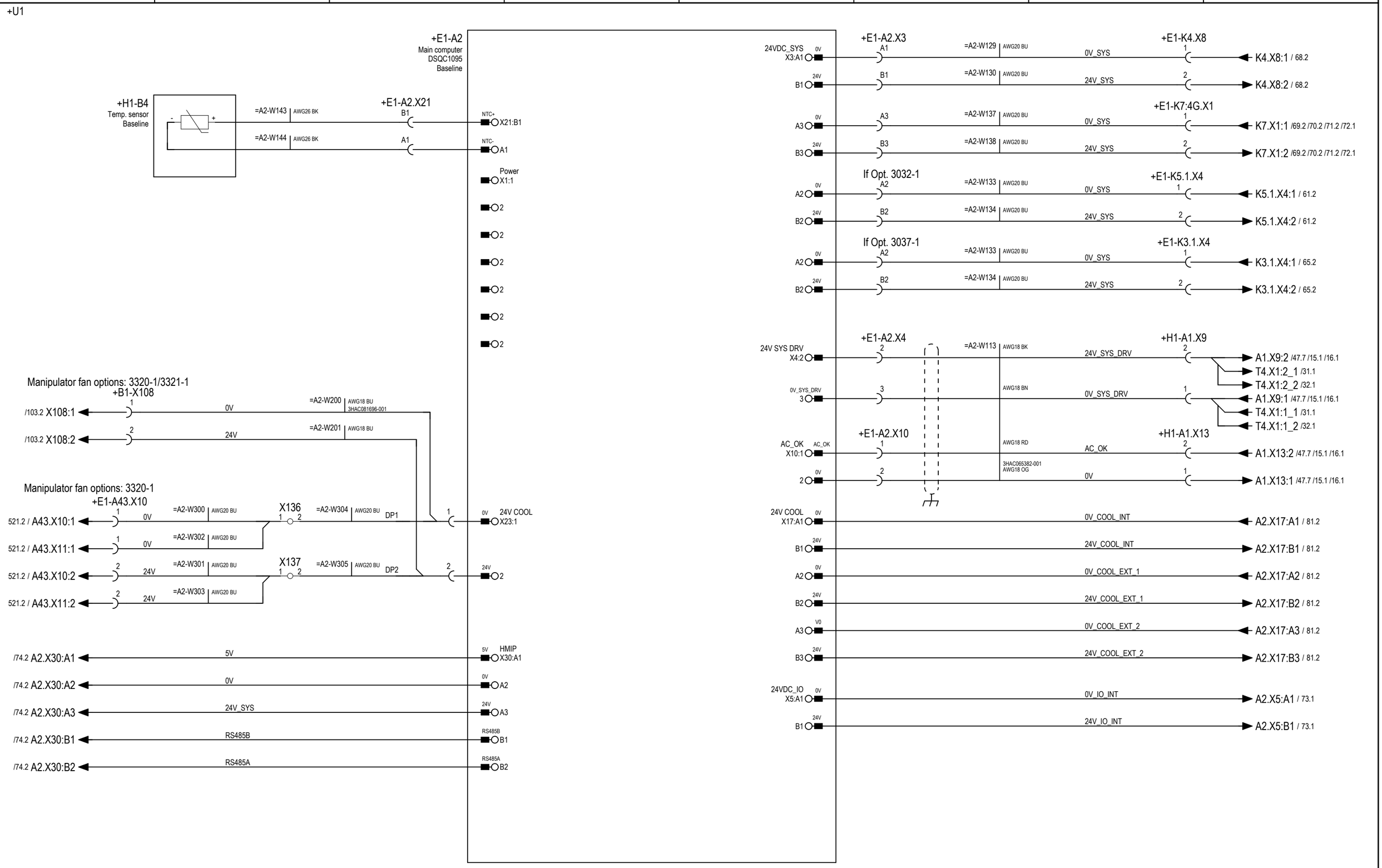

Latest revision: See revision text		Lab/Office: RA/RDP	OmniCore V400XT Main computer	Status: APPROVED	Plant: = Location: + Sublocation: +
Prepared by, date: E. Mesaros	Approved by, date: M. Wadstein 2025-03-10			Document no. 3HAC082020-008	Rev. Ind 03

We reserve all rights in this document and in the information contained therein. Reproduction, use or disclosure to third parties without express authority is strictly forbidden. © Copyright ABB

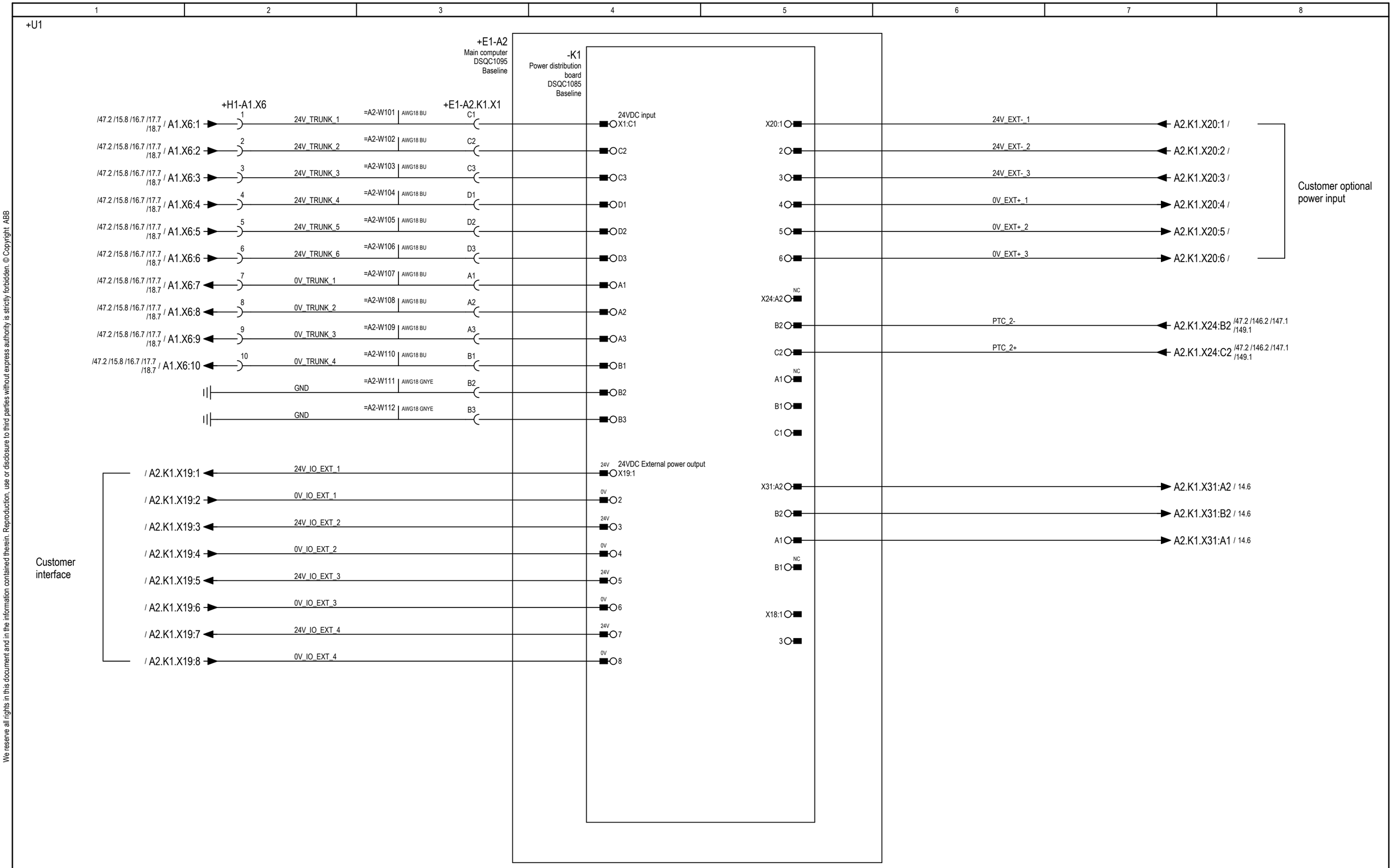

Latest revision: See revision text		Lab/Office: RA/RDP	OmniCore V400XT Power distribution board	Status: APPROVED	Plant: = Location: + Sublocation: +
Prepared by, date: E. Mesaros	Approved by, date: M. Wadstein 2025-03-10			Document no. 3HAC082020-008	Rev. Ind 03

We reserve all rights in this document and in the information contained therein. Reproduction, use or disclosure to third parties without express authority is strictly forbidden. © Copyright ABB

+U1

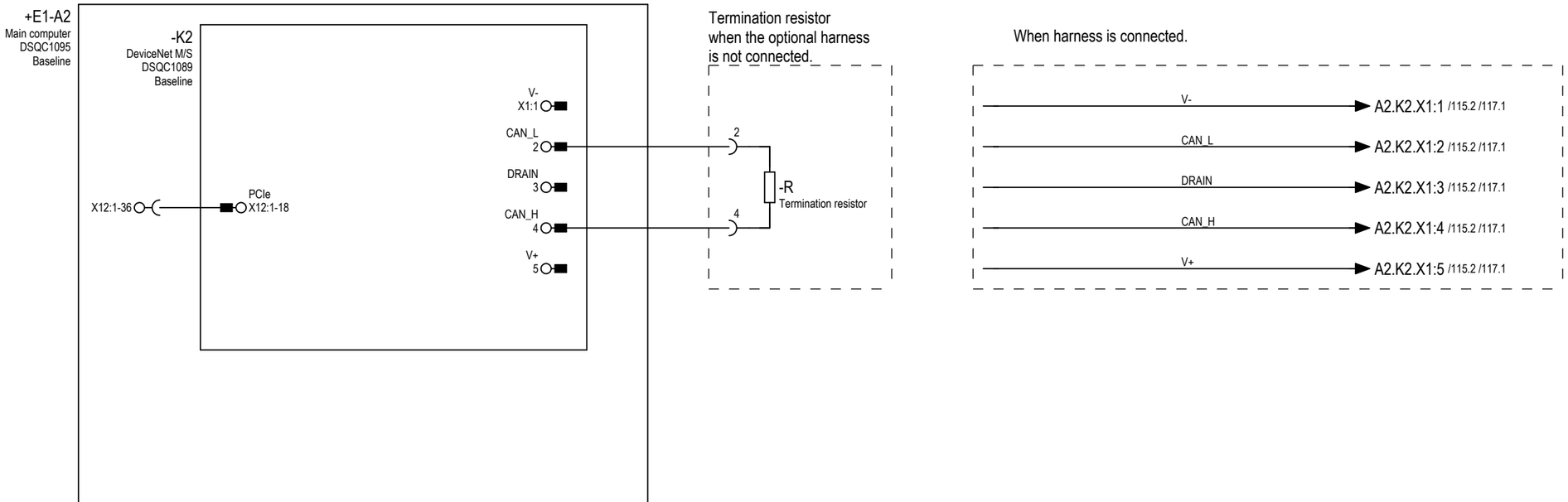

Latest revision: See revision text		Lab/Office: RA/RDP	OmniCore V400XT DeviceNet M/S	Status: APPROVED	Plant: = Location: + Sublocation: +	
Prepared by, date: E. Mesaros	Approved by, date: M. Wadstein 2025-03-10			Document no. 3HAC082020-008	Rev. Ind 03	Page 43 Next 44 Total 142

We reserve all rights in this document and in the information contained therein. Reproduction, use or disclosure to third parties without express authority is strictly forbidden. © Copyright ABB

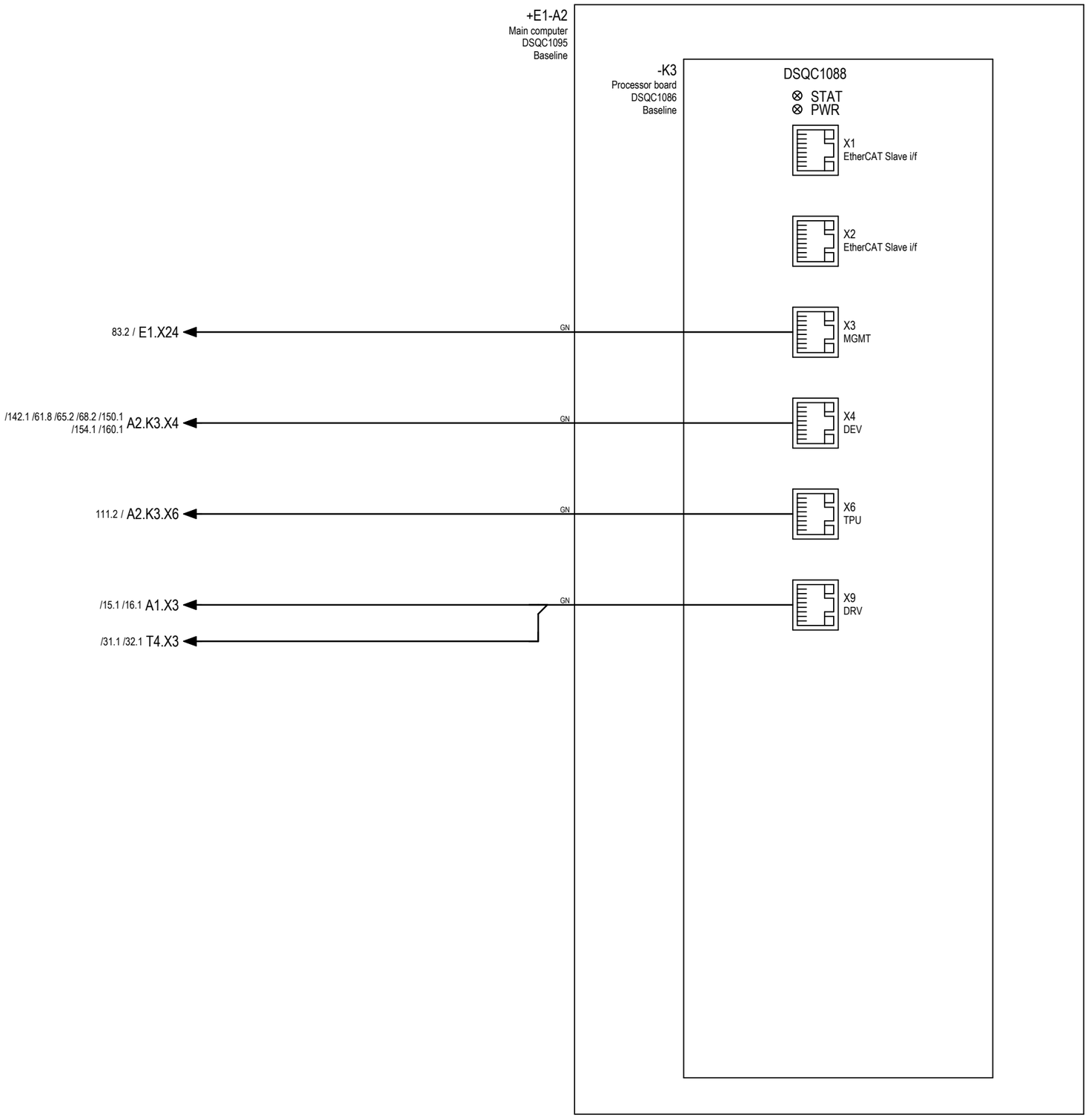

Latest revision: See revision text		Lab/Office: RA/RDP	OmniCore V400XT Processor board	Status: APPROVED	Plant: = Location: + Sublocation: +	
Prepared by, date: E. Mesaros	Approved by, date: M. Wadstein 2025-03-10			Document no. 3HAC082020-008	Rev. Ind 03	Page 44 Next 45 Total 142

We reserve all rights in this document and in the information contained therein. Reproduction, use or disclosure to third parties without express authority is strictly forbidden. © Copyright ABB

+U1

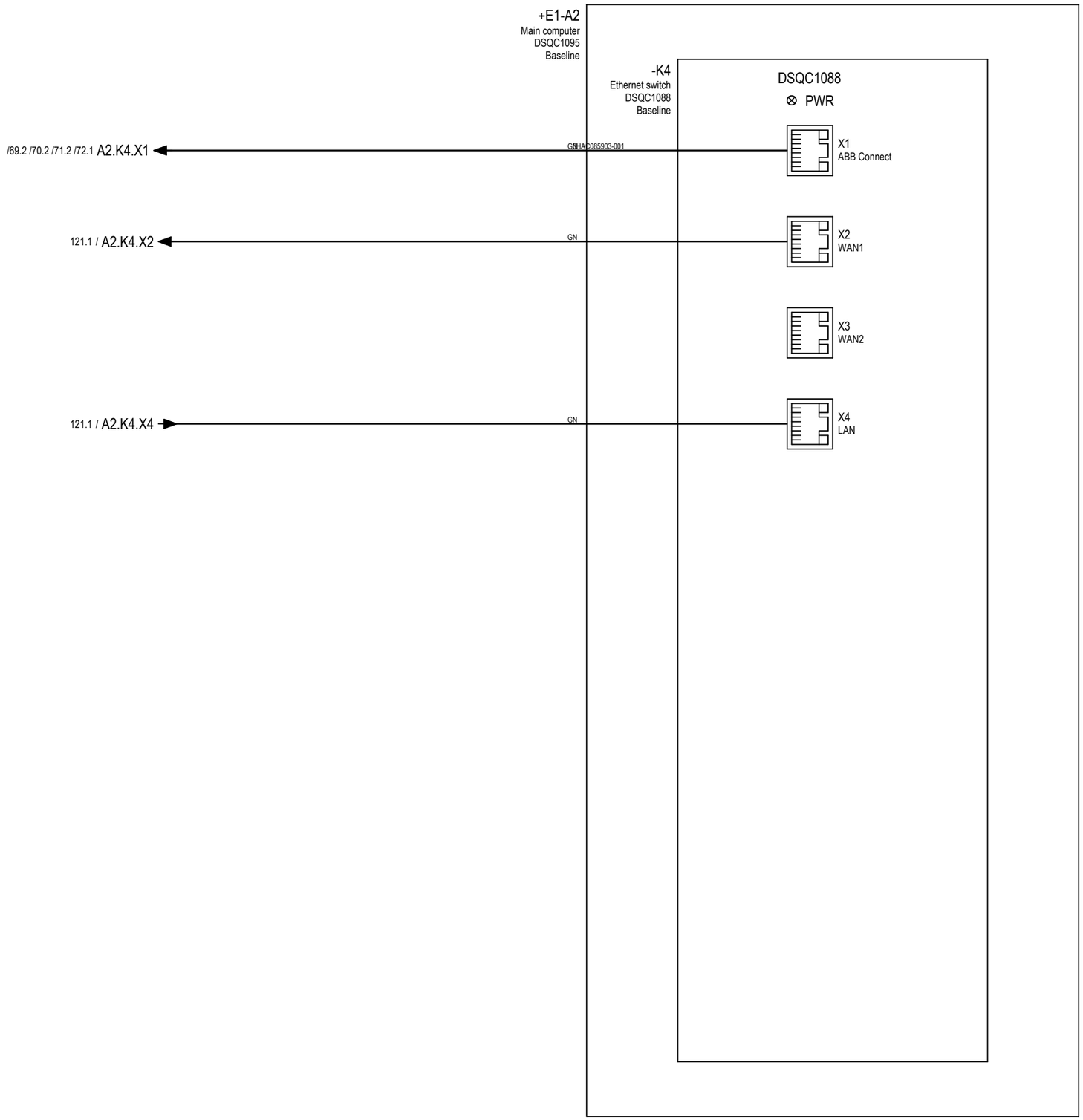

Latest revision: See revision text	ABB	Lab/Office: RA/RDP	OmniCore V400XT Switch basic	Status: APPROVED	Plant: = Location: + Sublocation: +
Prepared by, date: E. Mesaros	Approved by, date: M. Wadstein 2025-03-10			Document no. 3HAC082020-008	Rev. Ind 03

Page	45
Next	46
Total	142

+U1

Note 1. By adding jumper/bridge connectors, external safety equipment is bypassed. Jumper/bridge connection may only be performed by trained personnel.

Note 2. Auto Stop (AS)/ General Stop (GS) bypass jumpers are not pre-mounted.

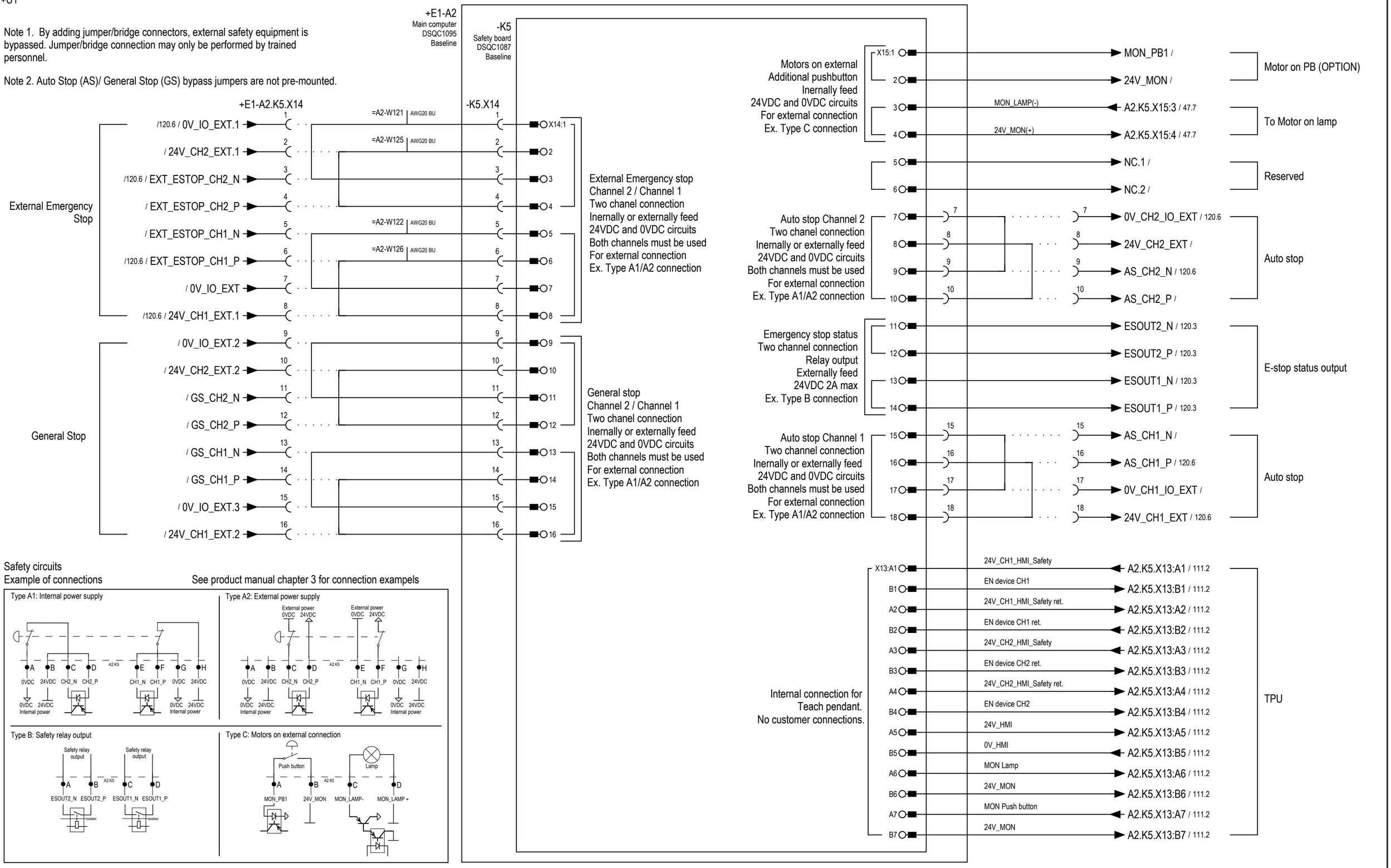

We reserve all rights in this document and in the information contained therein. Reproduction, use or disclosure to third parties without express authority is strictly forbidden. © Copyright ABB

Latest revision: See revision text		Lab/Office: RA/RDP	OmniCore V400XT Safety board	Status: APPROVED	Plant: = Location: + Sublocation: +
Prepared by, date: E. Mesaros	Approved by, date: M. Wadstein 2025-03-10			Document no. 3HAC082020-008	Rev. Ind 03

We reserve all rights in this document and in the information contained therein. Reproduction, use or disclosure to third parties without express authority is strictly forbidden. © Copyright ABB

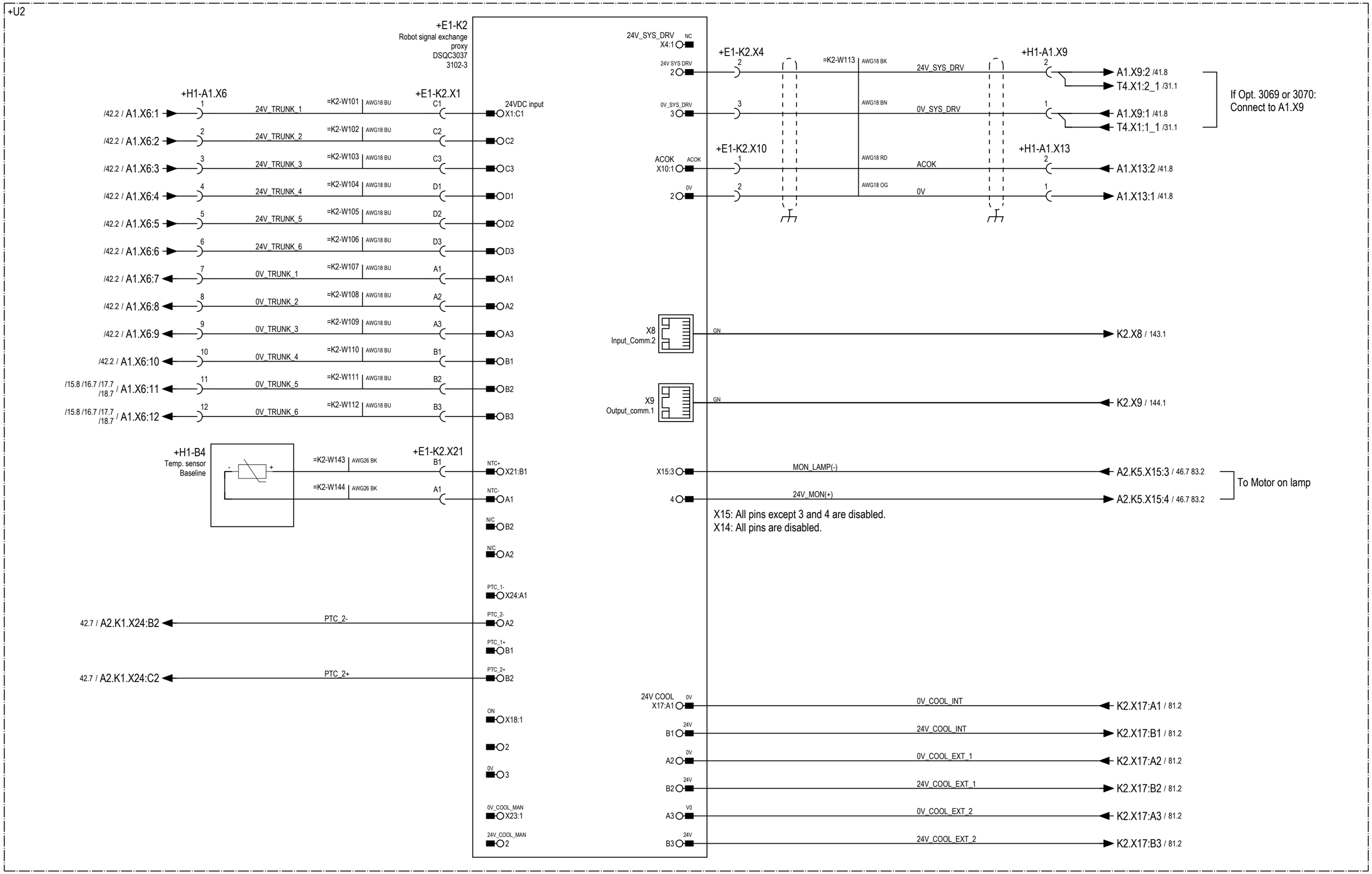

Latest revision: See revision text		Lab/Office: RA/RDP	OmniCore V400XT Robot Signal Exchange Unit	Status: APPROVED	Plant: = Location: + Sublocation: +
Prepared by, date: E. Mesaros	Approved by, date: M. Wadstein 2025-03-10			Document no. 3HAC082020-008	Rev. Ind 03

We reserve all rights in this document and in the information contained therein. Reproduction, use or disclosure to third parties without express authority is strictly forbidden. © Copyright ABB

COMMUNICATION

We reserve all rights in this document and in the information contained therein. Reproduction, use or disclosure to third parties without express authority is strictly forbidden. © Copyright ABB

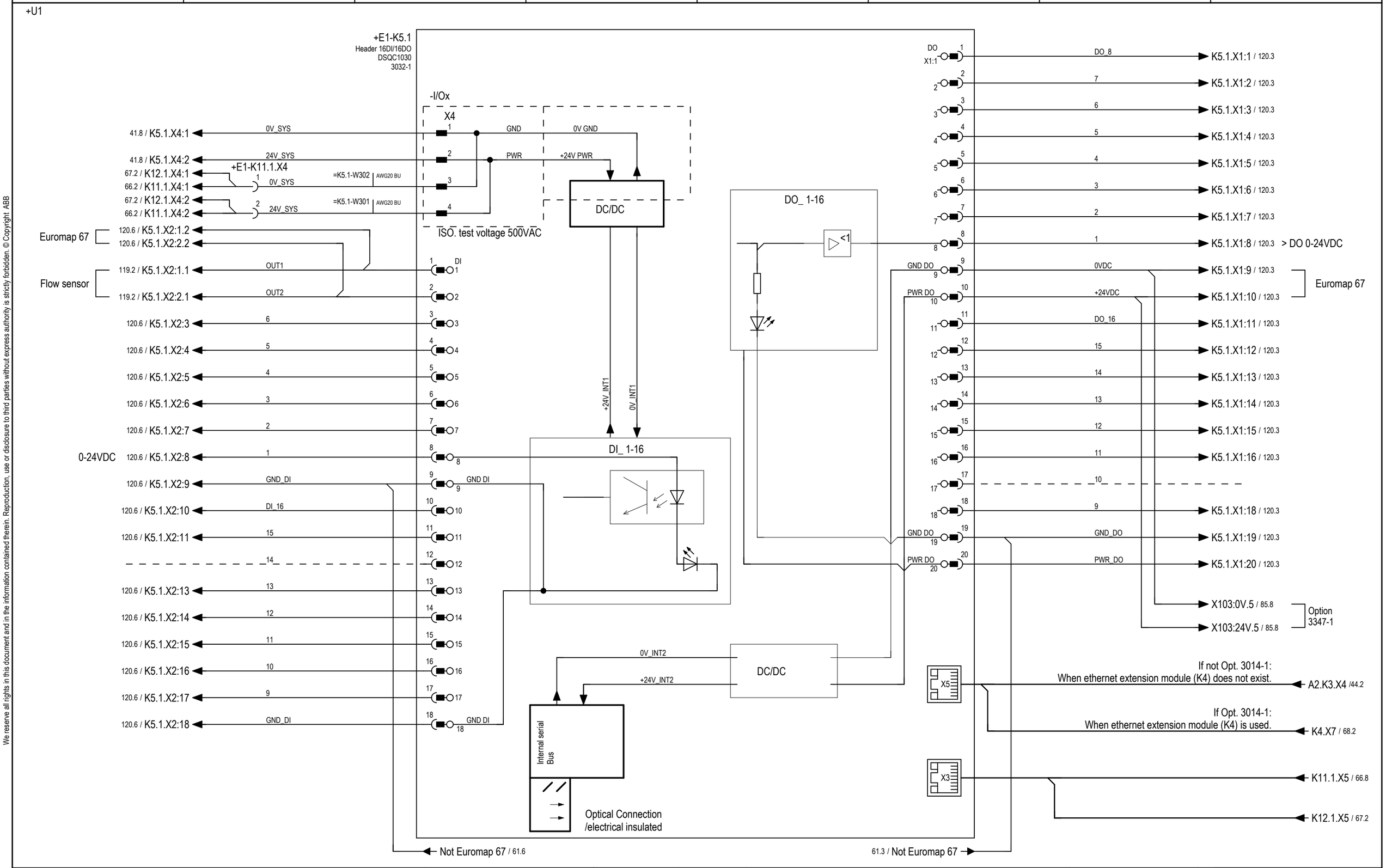

Latest revision: See revision text		Lab/Office: RA/RDP	OmniCore V400XT Master I/O unit	Status: APPROVED	Plant: = Location: + Sublocation: +
Prepared by, date: E. Mesaros	Approved by, date: M. Wadstein 2025-03-10			Document no. 3HAC082020-008	Rev. Ind 03
					Page 61 Next 62 Total 142

We reserve all rights in this document and in the information contained therein. Reproduction, use or disclosure to third parties without express authority is strictly forbidden. © Copyright ABB

+U1

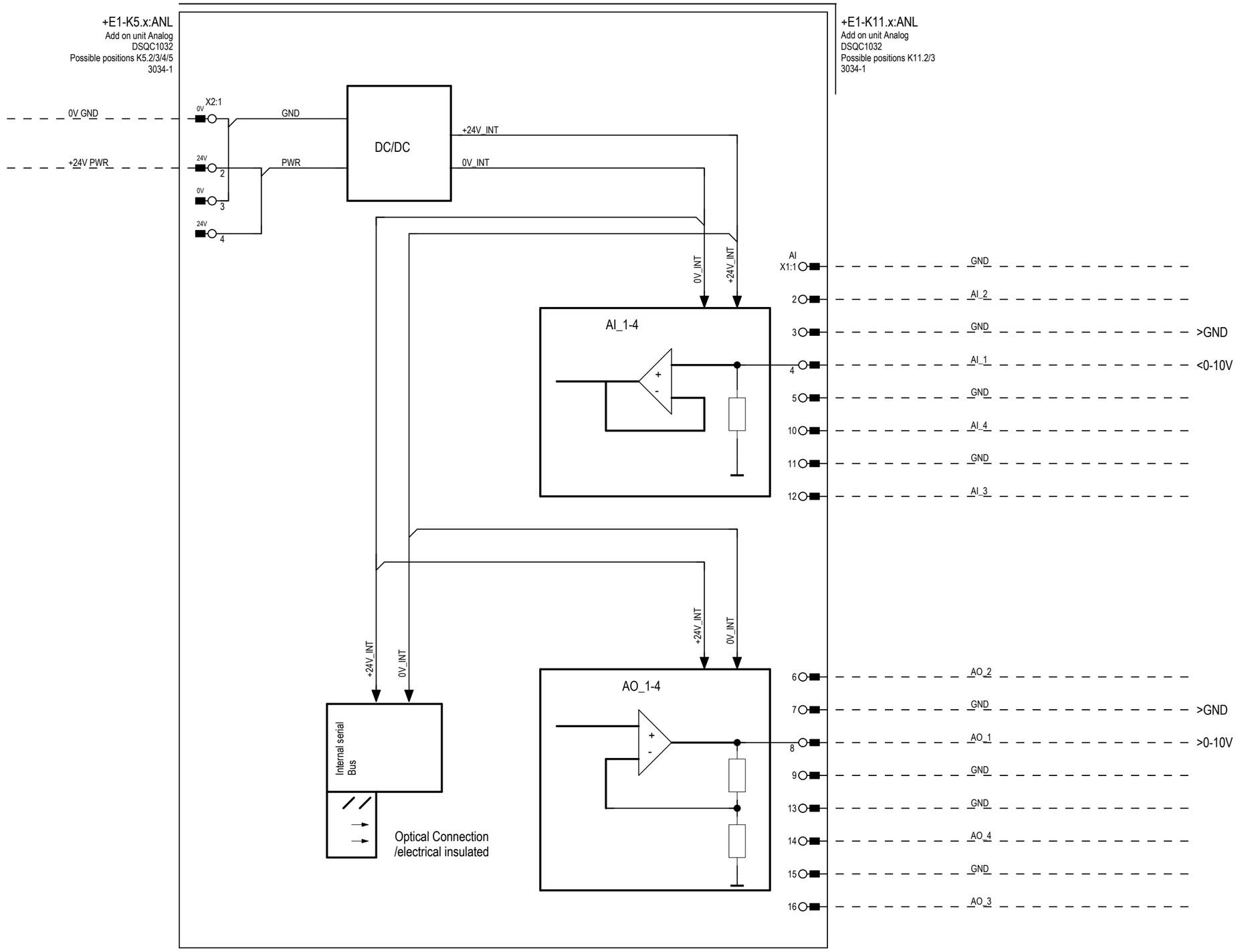

Latest revision: See revision text		Lab/Office: RA/RDP	OmniCore V400XT Add on unit Analog	Status: APPROVED	Plant: = Location: + Sublocation: +	
Prepared by, date: E. Mesaros	Approved by, date: M. Wadstein 2025-03-10			Document no. 3HAC082020-008	Rev. Ind 03	Page 62 Next 63 Total 142

We reserve all rights in this document and in the information contained therein. Reproduction, use or disclosure to third parties without express authority is strictly forbidden. © Copyright ABB

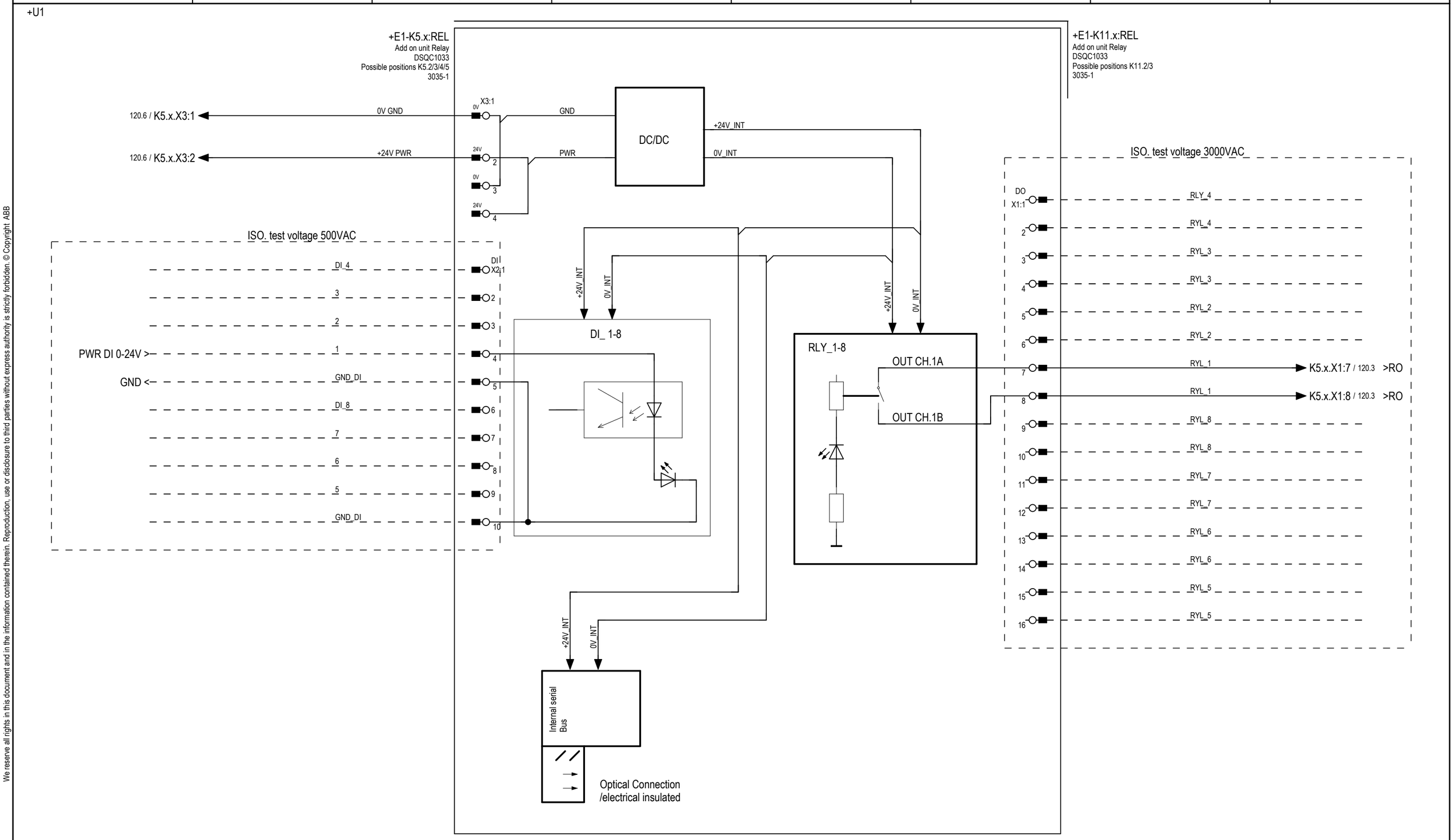

Latest revision: See revision text		Lab/Office: RA/RDP	OmniCore V400XT Add on unit Relay	Status: APPROVED	Plant: = Location: + Sublocation: +
Prepared by, date: E. Mesaros	Approved by, date: M. Wadstein 2025-03-10			Document no. 3HAC082020-008	Rev. Ind 03

+U1

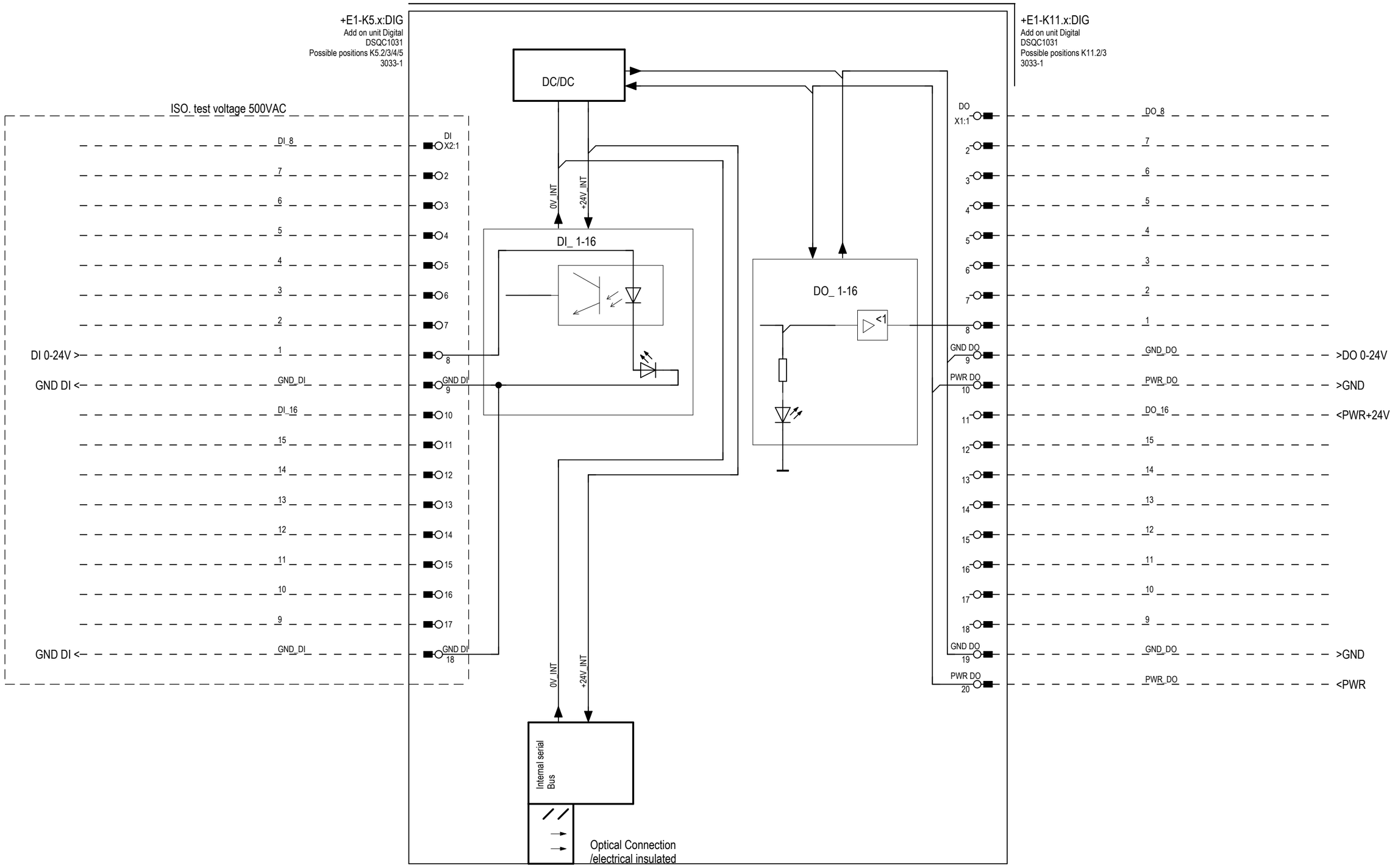

We reserve all rights in this document and in the information contained therein. Reproduction, use or disclosure to third parties without express authority is strictly forbidden. © Copyright ABB

Latest revision: See revision text		Lab/Office: RA/RDP	OmniCore V400XT Add on unit Digital	Status: APPROVED	Plant: = Location: + Sublocation: +
Prepared by, date: E. Mesaros	Approved by, date: M. Wadstein 2025-03-10			Document no. 3HAC082020-008	Rev. Ind 03

We reserve all rights in this document and in the information contained therein. Reproduction, use or disclosure to third parties without express authority is strictly forbidden. © Copyright ABB

+U1

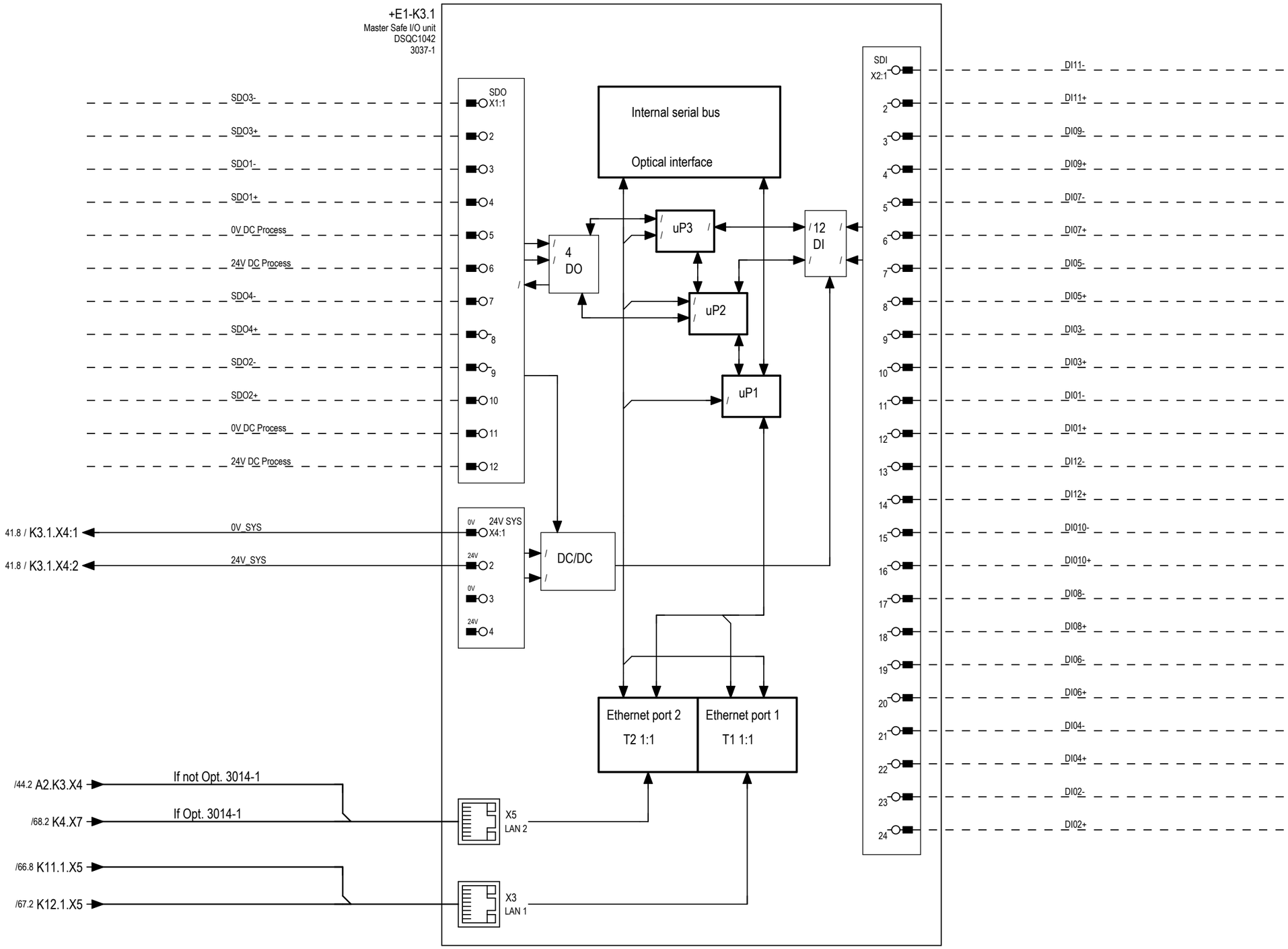

Latest revision: See revision text		Lab/Office: RA/RDP	OmniCore V400XT Master Safe I/O unit	Status: APPROVED	Plant: = Location: + Sublocation: +
Prepared by, date: E. Mesaros	Approved by, date: M. Wadstein 2025-03-10			Document no. 3HAC082020-008	Rev. Ind 03

We reserve all rights in this document and in the information contained therein. Reproduction, use or disclosure to third parties without express authority is strictly forbidden. © Copyright ABB

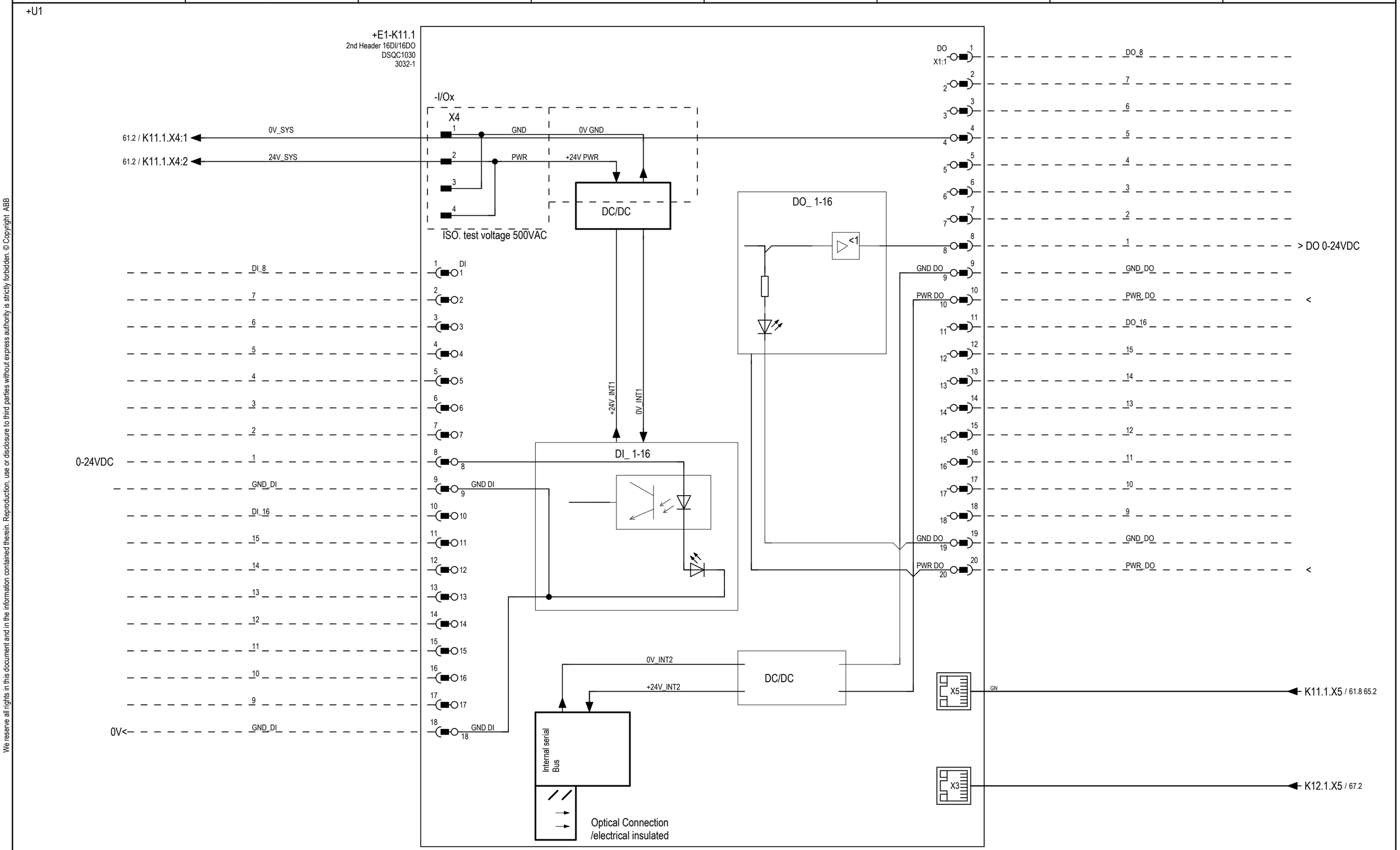

Latest revision: See revision text		Lab/Office: RA/RDP	OmniCore V400XT Master I/O unit 2nd	Status: APPROVED	Plant: = Location: + Sublocation: +
Prepared by, date: E. Mesaros	Approved by, date: M. Wadstein 2025-03-10			Document no. 3HAC082020-008	Rev. Ind 03
					Page 66 Next 67 Total 142

We reserve all rights in this document and in the information contained therein. Reproduction, use or disclosure to third parties without express authority is strictly forbidden. © Copyright ABB

+U1

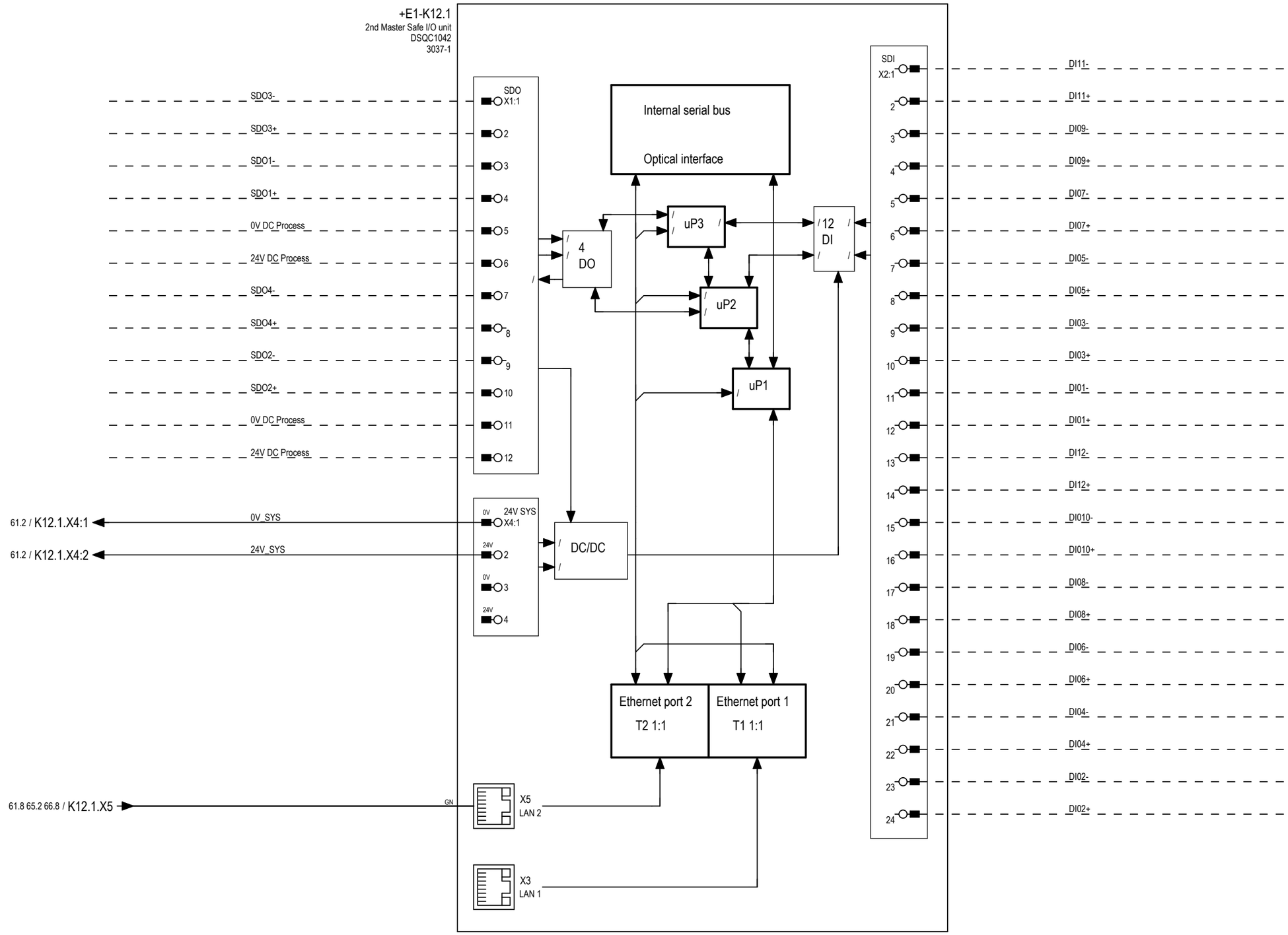

Latest revision: See revision text		Lab/Office: RA/RDP	OmniCore V400XT Master Safe I/O unit 2nd	Status: APPROVED	Plant: = Location: + Sublocation: +
Prepared by, date: E. Mesaros	Approved by, date: M. Wadstein 2025-03-10			Document no. 3HAC082020-008	Rev. Ind 03

+U1

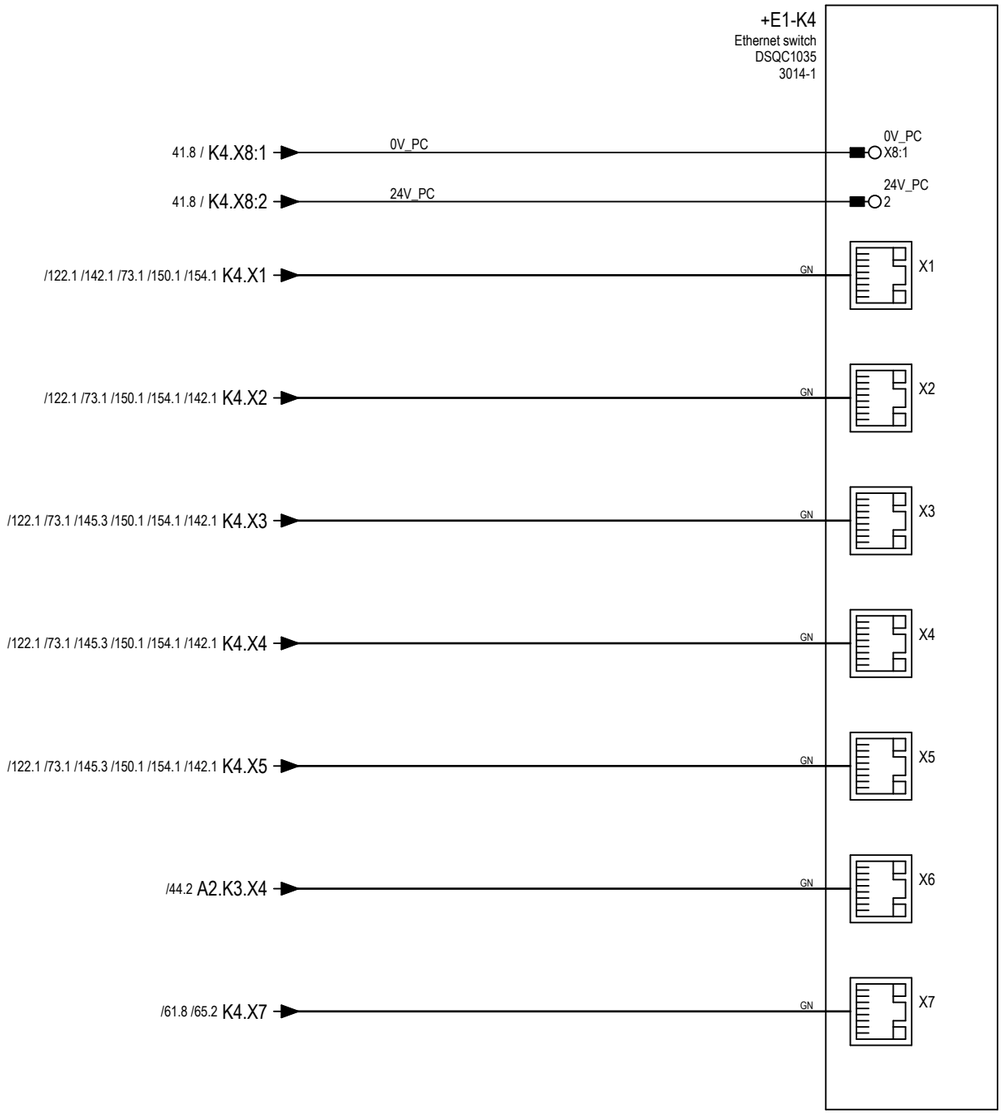

We reserve all rights in this document and in the information contained therein. Reproduction, use or disclosure to third parties without express authority is strictly forbidden. © Copyright ABB

Latest revision: See revision text		Lab/Office: RA/RDP	OmniCore V400XT Ethernet switch	Status: APPROVED	Plant: = Location: + Sublocation: +
Prepared by, date: E. Mesaros	Approved by, date: M. Wadstein 2025-03-10			Document no. 3HAC082020-008	Rev. Ind 03

We reserve all rights in this document and in the information contained therein. Reproduction, use or disclosure to third parties without express authority is strictly forbidden. © Copyright ABB

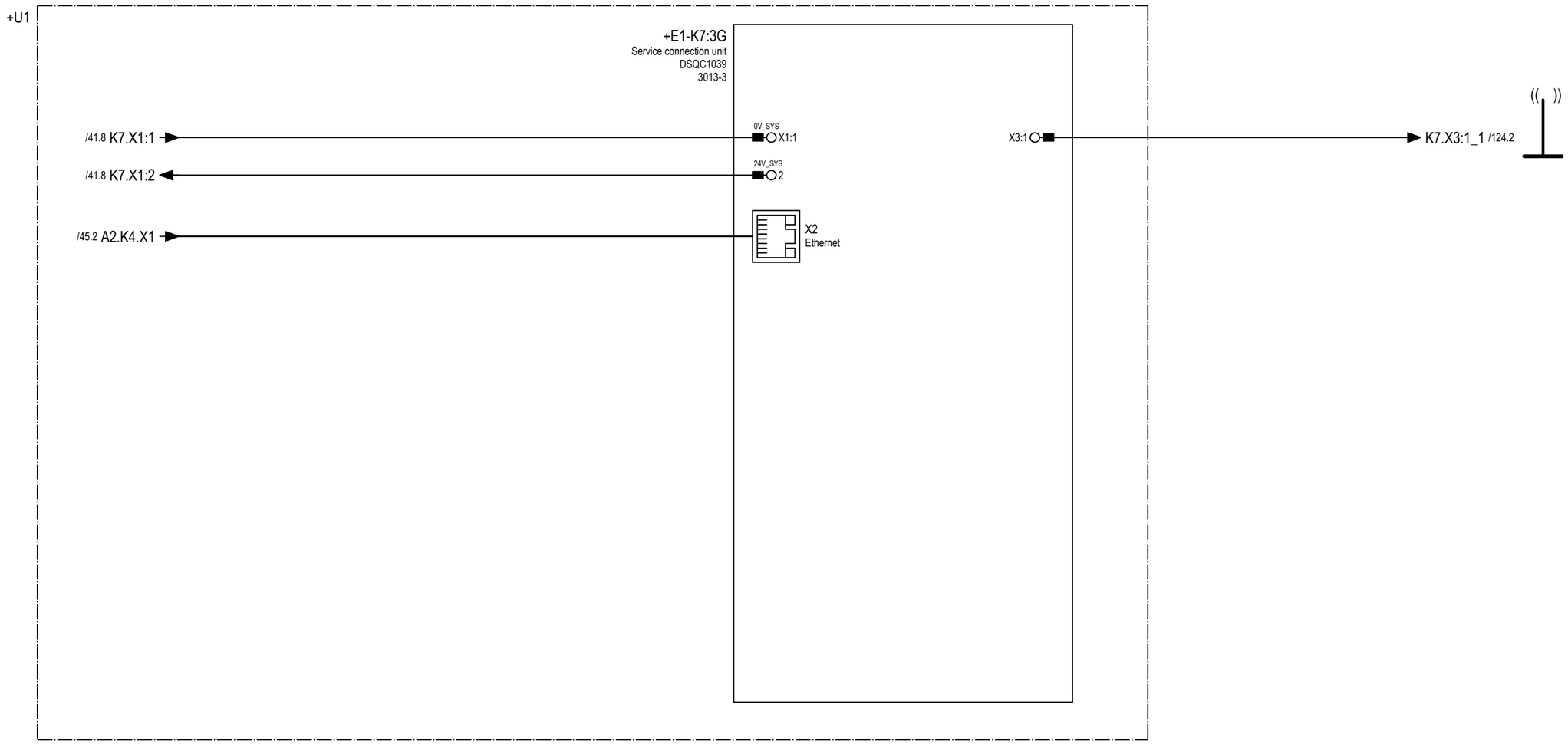

Latest revision: See revision text		Lab/Office: RA/RDP	OmniCore V400XT Connected service, 3G	Status: APPROVED	Plant: = Location: + Sublocation: +
Prepared by, date: E. Mesaros	Approved by, date: M. Wadstein 2025-03-10			Document no. 3HAC082020-008	Rev. Ind 03

We reserve all rights in this document and in the information contained therein. Reproduction, use or disclosure to third parties without express authority is strictly forbidden. © Copyright ABB

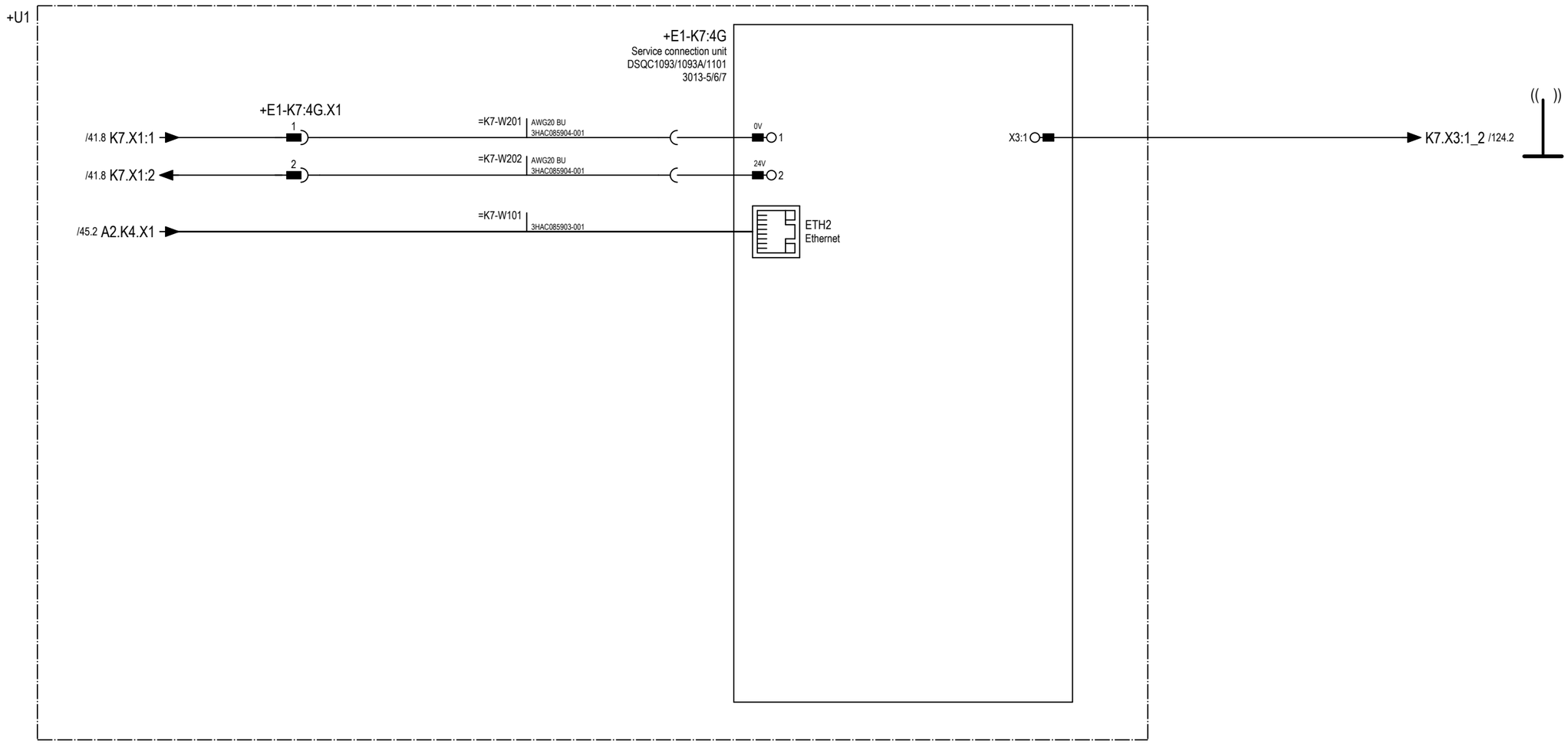

Latest revision:
See revision text

Prepared by, date: E. Mesaros
Approved by, date: M. Wadstein 2025-03-10

ABB
Lab/Office: RA/RDP

OmniCore V400XT
Connected service, 4G

Status: APPROVED
Plant: =
Location: +
Sublocation: +

Document no. 3HAC082020-008
Rev. Ind 03

We reserve all rights in this document and in the information contained therein. Reproduction, use or disclosure to third parties without express authority is strictly forbidden. © Copyright ABB

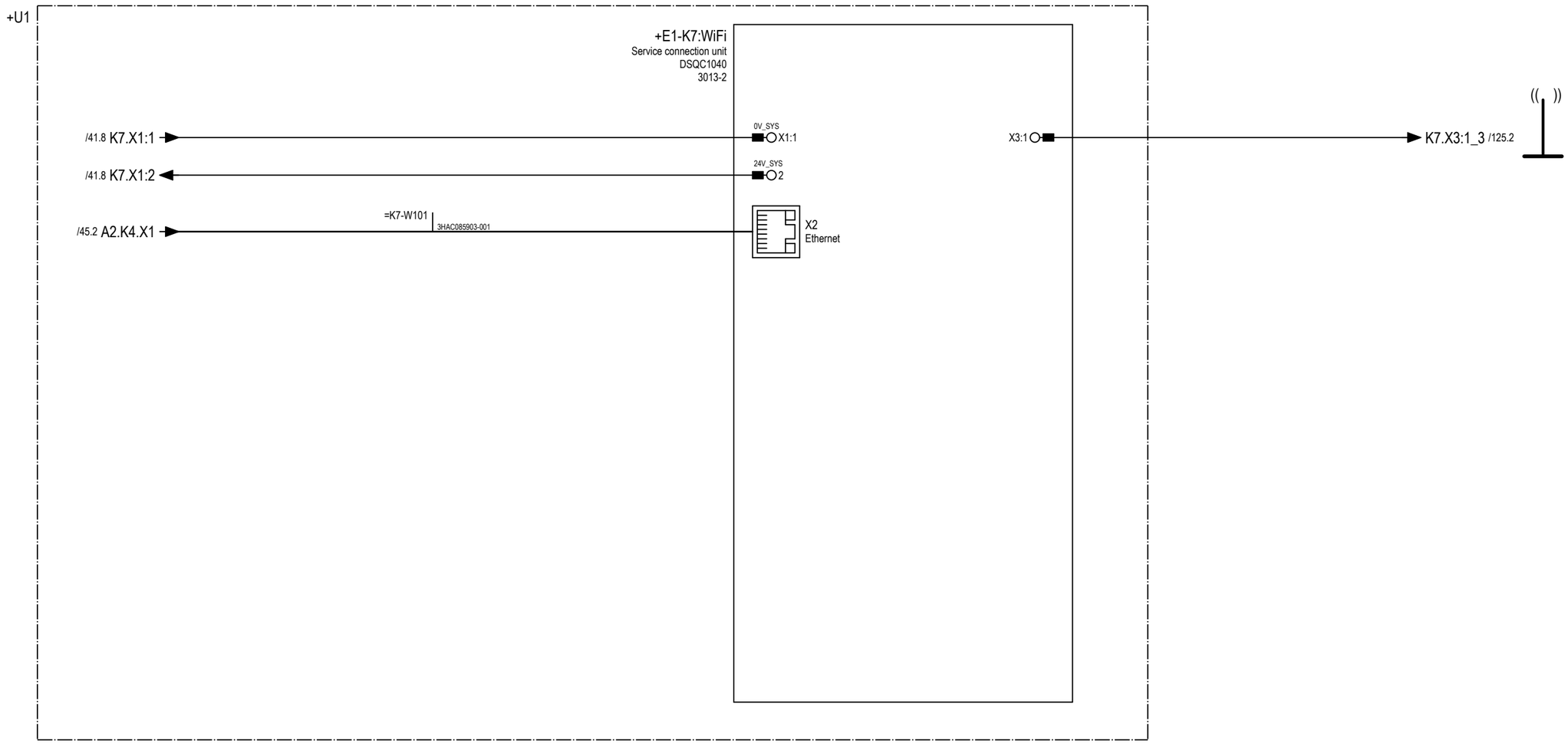

Latest revision: See revision text	ABB	Lab/Office: RA/RDP	OmniCore V400XT Connected service, Wi-Fi	Status: APPROVED	Plant: = Location: + Sublocation: +
Prepared by, date: E. Mesaros	Approved by, date: M. Wadstein 2025-03-10			Document no. 3HAC082020-008	Rev. Ind 03
					Page 71 Next 72 Total 142

+U1

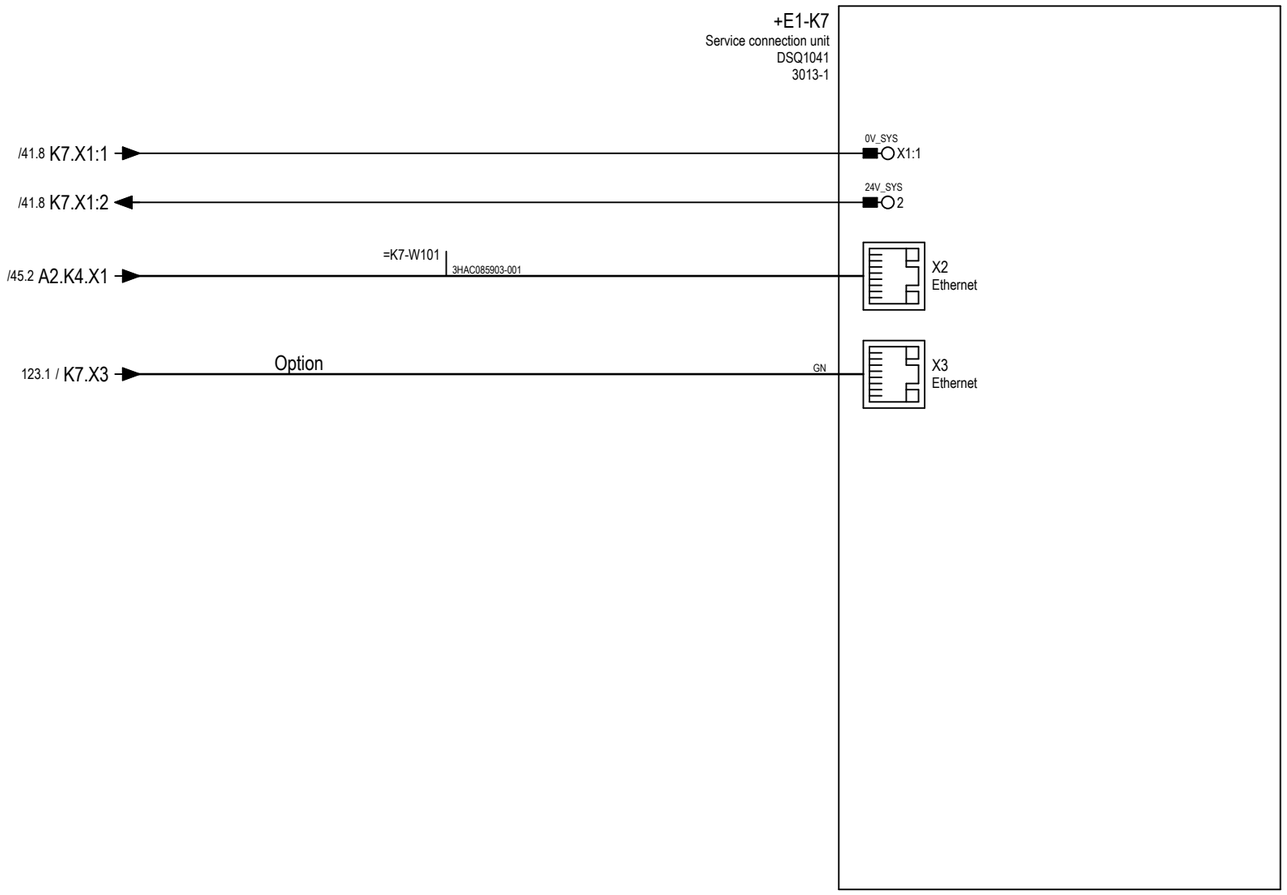

We reserve all rights in this document and in the information contained therein. Reproduction, use or disclosure to third parties without express authority is strictly forbidden. © Copyright ABB

Latest revision: See revision text	ABB	Lab/Office: RA/RDP	OmniCore V400XT Connected service, Wired	Status: APPROVED	Plant: = Location: + Sublocation: +
Prepared by, date: E. Mesaros	Approved by, date: M. Wadstein 2025-03-10			Document no. 3HAC082020-008	Rev. Ind 03

We reserve all rights in this document and in the information contained therein. Reproduction, use or disclosure to third parties without express authority is strictly forbidden. © Copyright ABB

+U1

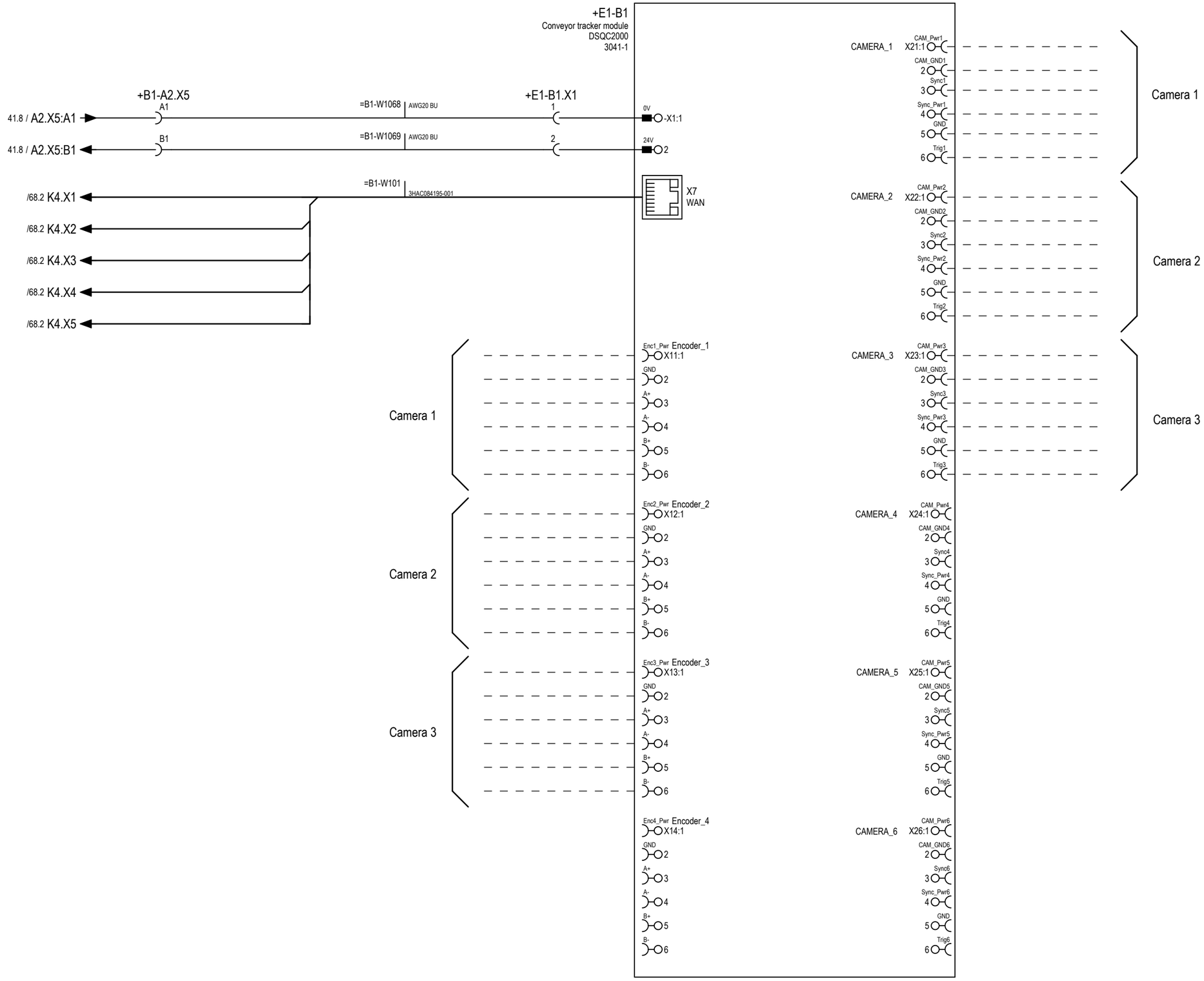

Latest revision: See revision text		Lab/Office: RA/RDP	OmniCore V400XT Conveyor tracker module	Status: APPROVED	Plant: = Location: + Sublocation: +	
				Document no. 3HAC082020-008	Rev. Ind 03	Page 73 Next 74 Total 142
Prepared by, date: E. Mesaros	Approved by, date: M. Wadstein 2025-03-10					

We reserve all rights in this document and in the information contained therein. Reproduction, use or disclosure to third parties without express authority is strictly forbidden. © Copyright ABB

+U1

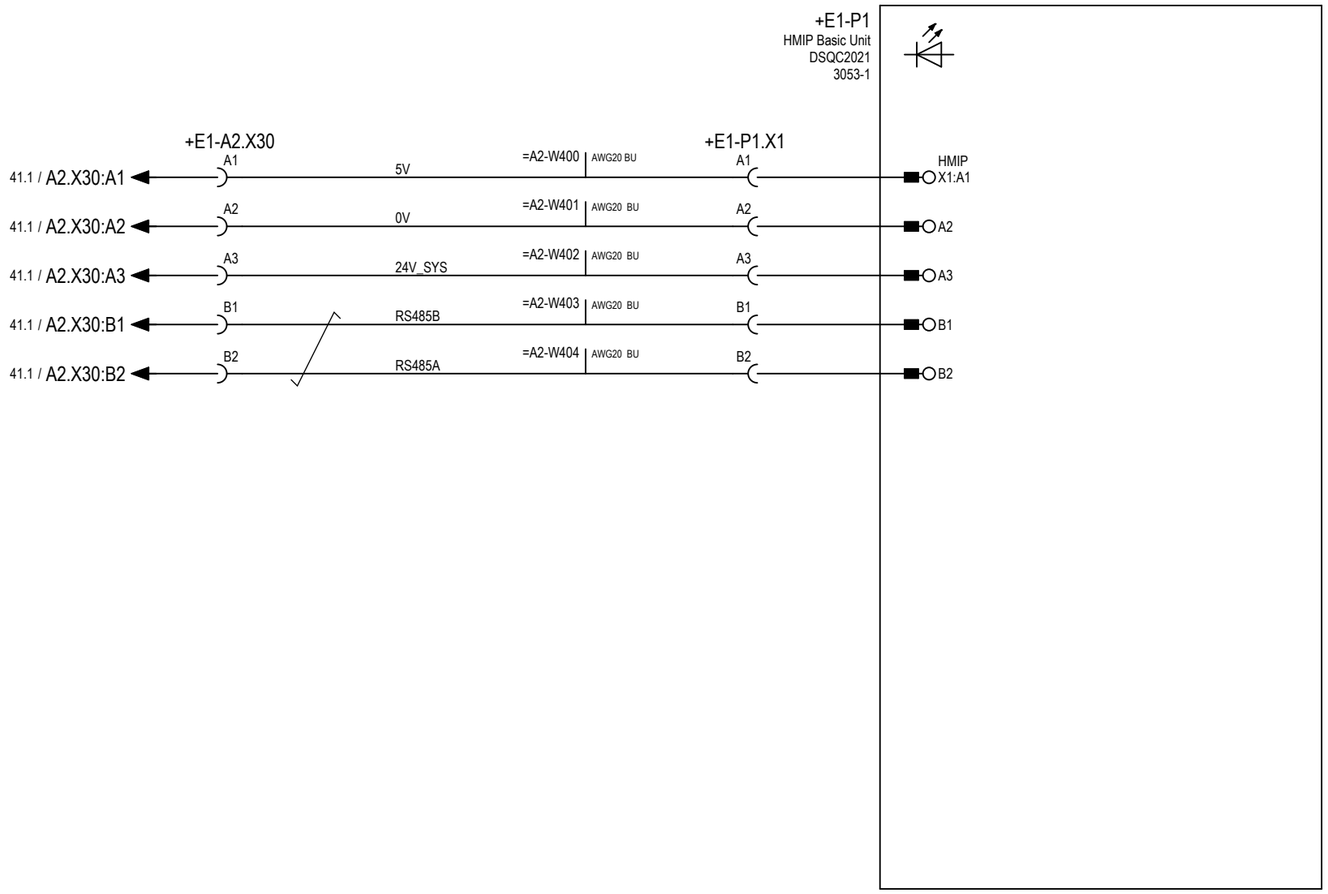

Latest revision: See revision text		Lab/Office: RA/RDP	OmniCore V400XT HMIP screen with indicators	Status: APPROVED	Plant: = Location: + Sublocation: +
Prepared by, date: E. Mesaros	Approved by, date: M. Wadstein 2025-03-10			Document no. 3HAC082020-008	Rev. Ind 03

We reserve all rights in this document and in the information contained therein. Reproduction, use or disclosure to third parties without express authority is strictly forbidden. © Copyright ABB

CABINET

Latest revision: See revision text	ABB	Lab/Office: RA/RDP	OmniCore V400XT ----------CABINET----------	Status: APPROVED	Plant: = Location: + Sublocation: +
Prepared by, date: E. Mesaros	Approved by, date: M. Wadstein 2025-03-10			Document no. 3HAC082020-008	Rev. Ind 03

We reserve all rights in this document and in the information contained therein. Reproduction, use or disclosure to third parties without express authority is strictly forbidden. © Copyright ABB

+U1

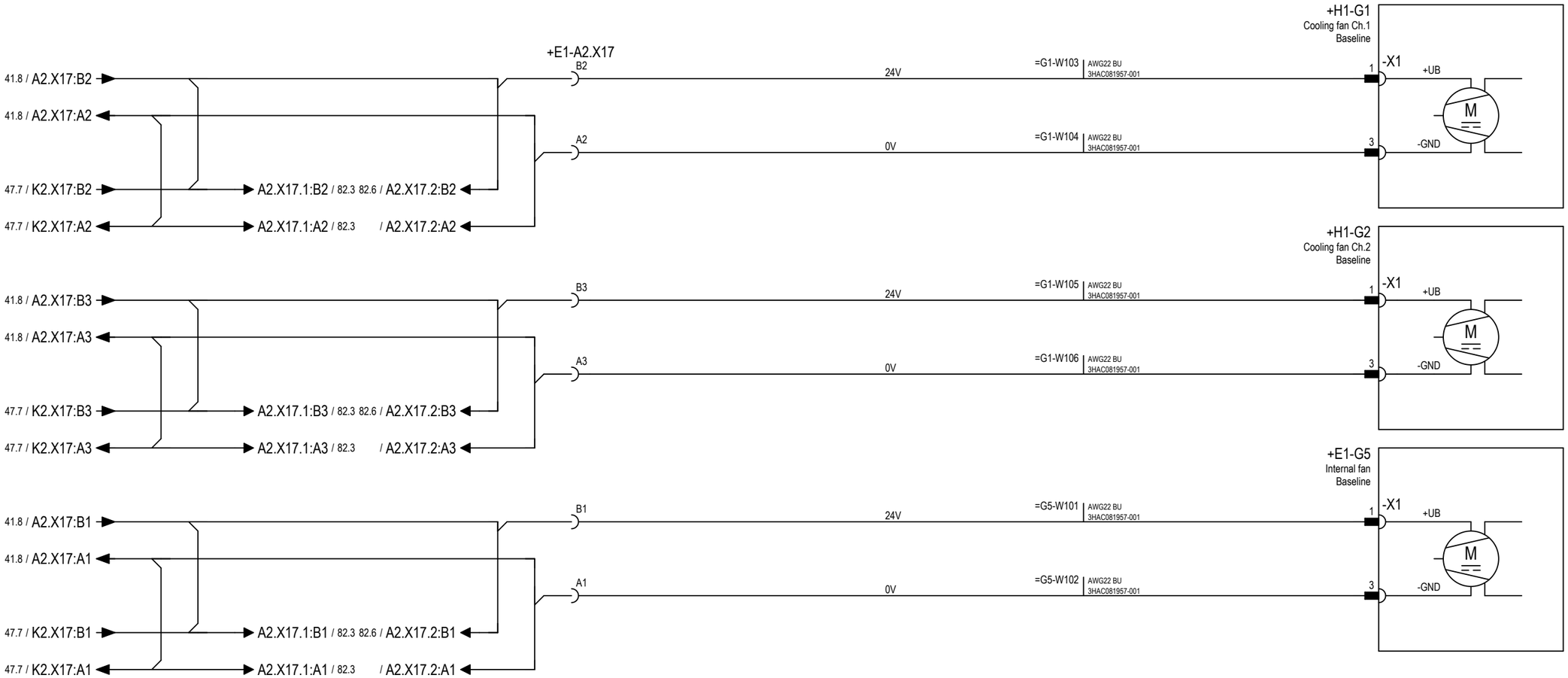

Latest revision: See revision text		Lab/Office: RA/RDP	OmniCore V400XT Cooling	Status: APPROVED	Plant: = Location: + Sublocation: +	
Prepared by, date: E. Mesaros	Approved by, date: M. Wadstein 2025-03-10			Document no. 3HAC082020-008	Rev. Ind 03	Page 81 Next 82 Total 142

We reserve all rights in this document and in the information contained therein. Reproduction, use or disclosure to third parties without express authority is strictly forbidden. © Copyright ABB

+U1

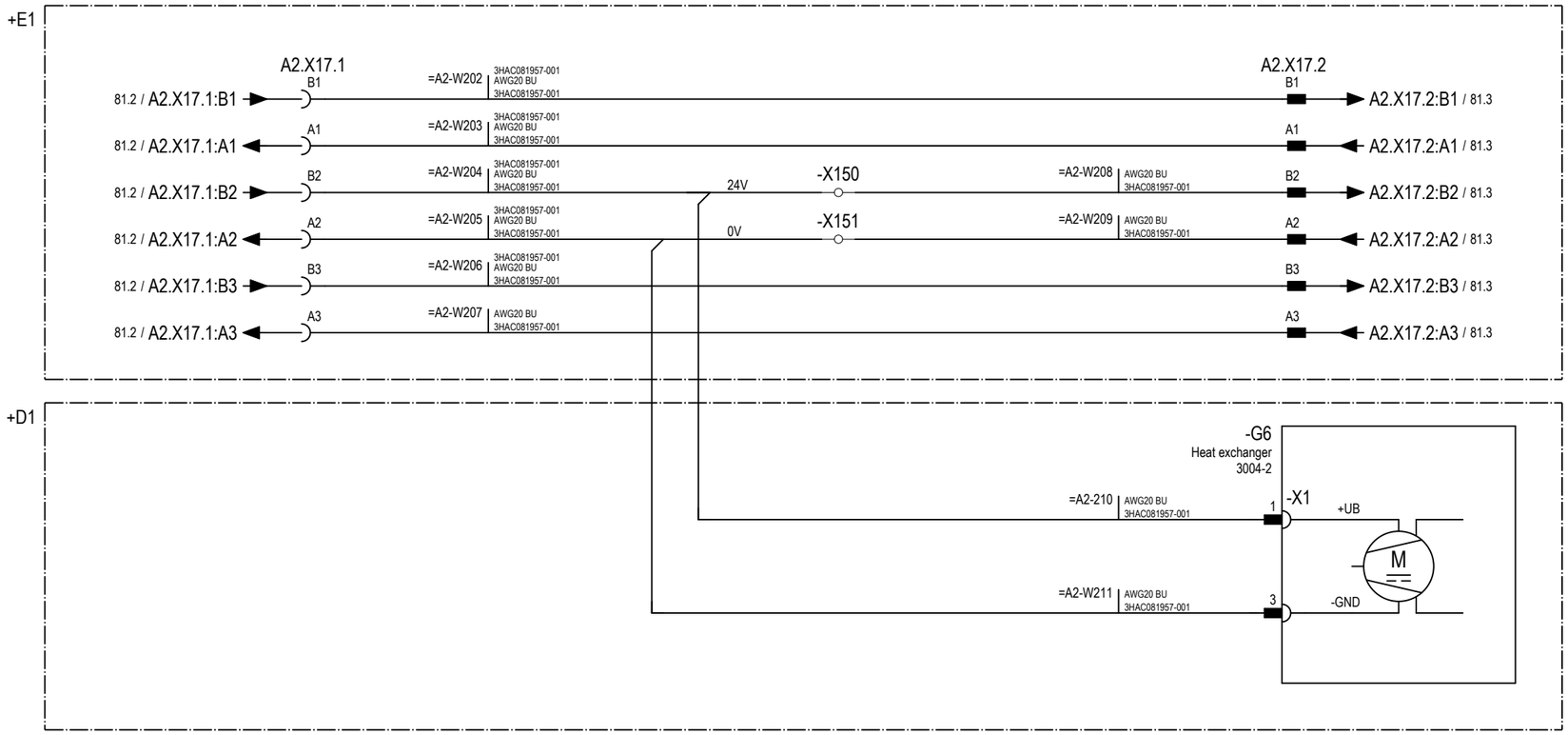

Latest revision: See revision text		Lab/Office: RA/RDP	OmniCore V400XT Heat exchanger	Status: APPROVED	Plant: = Location: + Sublocation: +	
Prepared by, date: E. Mesaros	Approved by, date: M. Wadstein 2025-03-10			Document no. 3HAC082020-008	Rev. Ind 03	Page 82 Next 83 Total 142

+U1

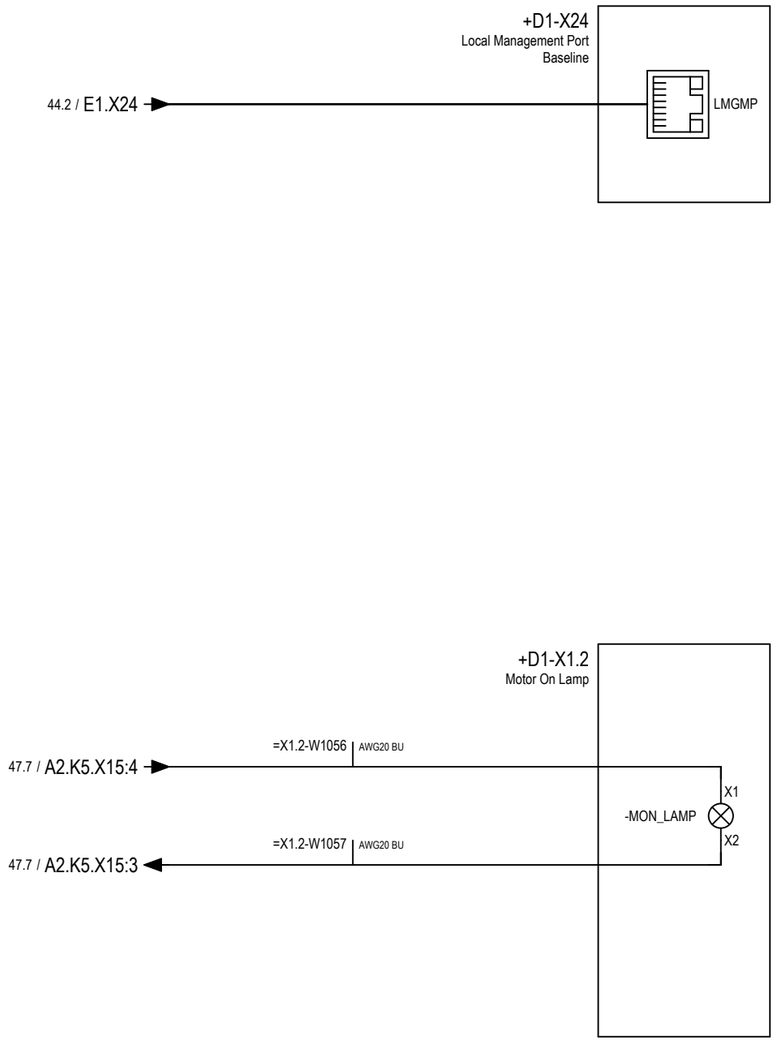

We reserve all rights in this document and in the information contained therein. Reproduction, use or disclosure to third parties without express authority is strictly forbidden. © Copyright ABB

Latest revision: See revision text	ABB	Lab/Office: RA/RDP	OmniCore V400XT Service port & Motors On Lamp	Status: APPROVED	Plant: = Location: + Sublocation: +
Prepared by, date: E. Mesaros	Approved by, date: M. Wadstein 2025-03-10			Document no. 3HAC082020-008	Rev. Ind 03

+U1

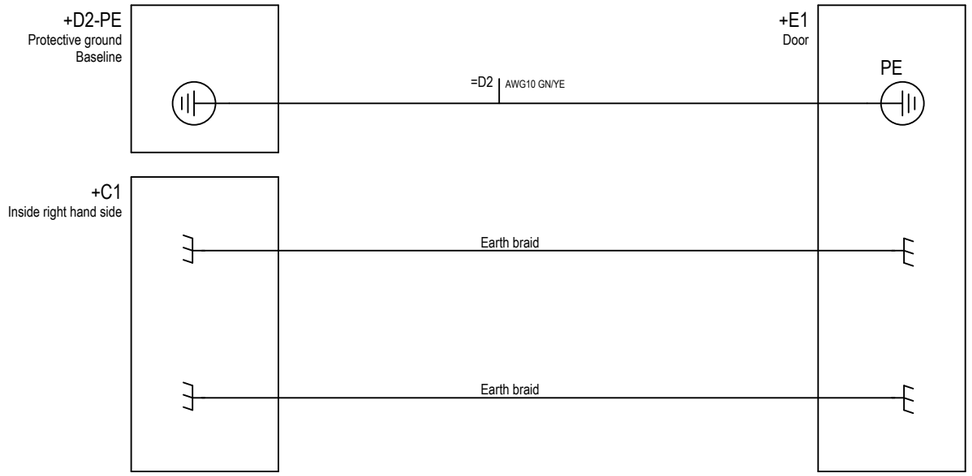

We reserve all rights in this document and in the information contained therein. Reproduction, use or disclosure to third parties without express authority is strictly forbidden. © Copyright ABB

Latest revision: See revision text	ABB	Lab/Office: RA/RDP	OmniCore V400XT Protective ground	Status: APPROVED	Plant: = Location: + Sublocation: +
Prepared by, date: E. Mesaros	Approved by, date: M. Wadstein 2025-03-10			Document no. 3HAC082020-008	Rev. Ind 03

We reserve all rights in this document and in the information contained therein. Reproduction, use or disclosure to third parties without express authority is strictly forbidden. © Copyright ABB

+U1

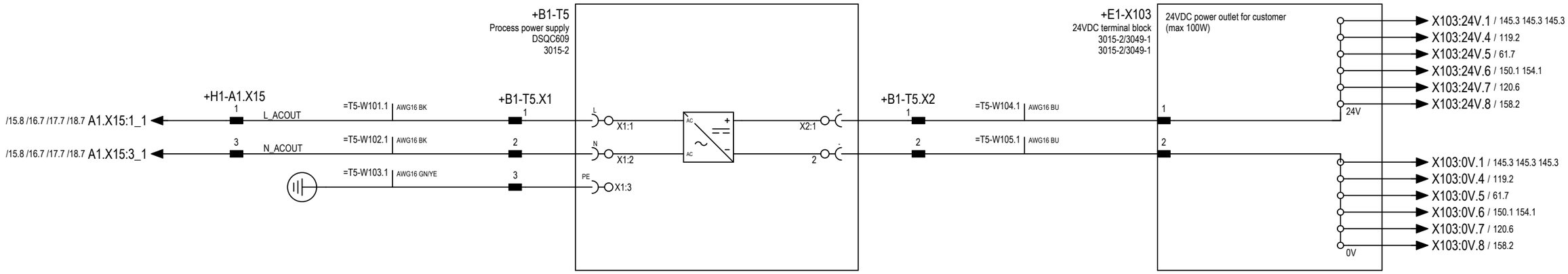

Latest revision: See revision text		Lab/Office: RA/RDP	OmniCore V400XT Power supply	Status: APPROVED	Plant: = Location: + Sublocation: +	
Prepared by, date: E. Mesaros	Approved by, date: M. Wadstein 2025-03-10			Document no. 3HAC082020-008	Rev. Ind 03	Page 85 Next 86 Total 142

We reserve all rights in this document and in the information contained therein. Reproduction, use or disclosure to third parties without express authority is strictly forbidden. © Copyright ABB

+U1

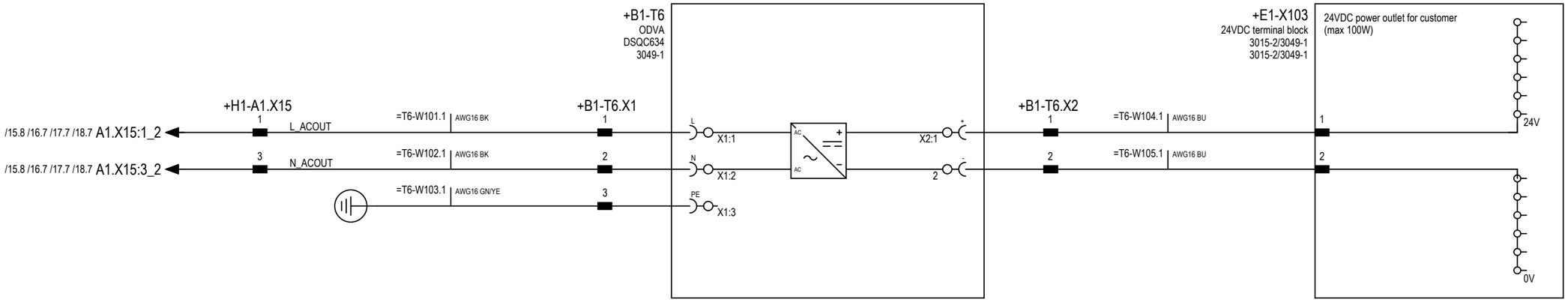

Latest revision: See revision text		Lab/Office: RA/RDP	OmniCore V400XT Power supply	Status: APPROVED	Plant: = Location: + Sublocation: +	
Prepared by, date: E. Mesaros	Approved by, date: M. Wadstein 2025-03-10			Document no. 3HAC082020-008	Rev. Ind 03	Page 86 Next 87 Total 142

We reserve all rights in this document and in the information contained therein. Reproduction, use or disclosure to third parties without express authority is strictly forbidden. © Copyright ABB

+U1

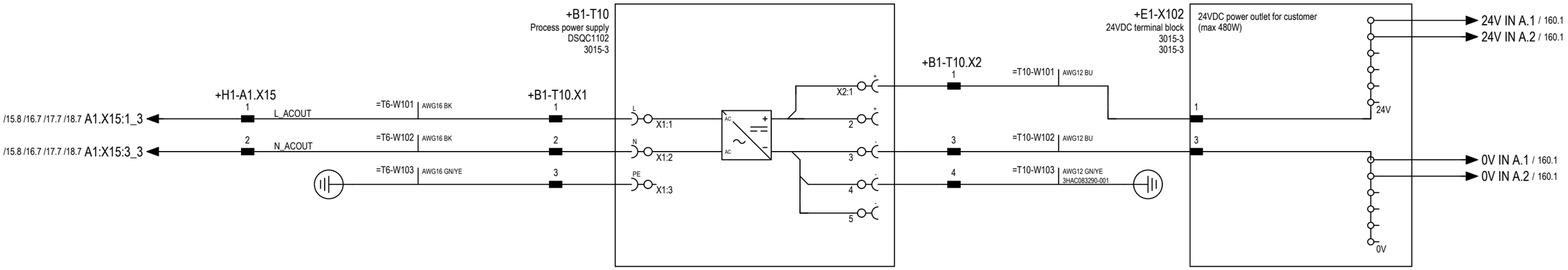

Latest revision: See revision text		Lab/Office: RA/RDP	OmniCore V400XT Power supply	Status: APPROVED	Plant: = Location: + Sublocation: +	
Prepared by, date: E. Mesaros	Approved by, date: M. Wadstein 2025-03-10			Document no. 3HAC082020-008	Rev. Ind 03	Page 87 Next 100 Total 142

We reserve all rights in this document and in the information contained therein. Reproduction, use or disclosure to third parties without express authority is strictly forbidden. © Copyright ABB

FRONT PANEL CONNECTIONS

Latest revision: See revision text	ABB	Lab/Office: RA/RDP	OmniCore V400XT ----------FRONT PANEL CONNECTIONS----------	Status: APPROVED	Plant: = Location: + Sublocation: +
Prepared by, date: E. Mesaros	Approved by, date: M. Wadstein 2025-03-10			Document no. 3HAC082020-008	Rev. Ind 03

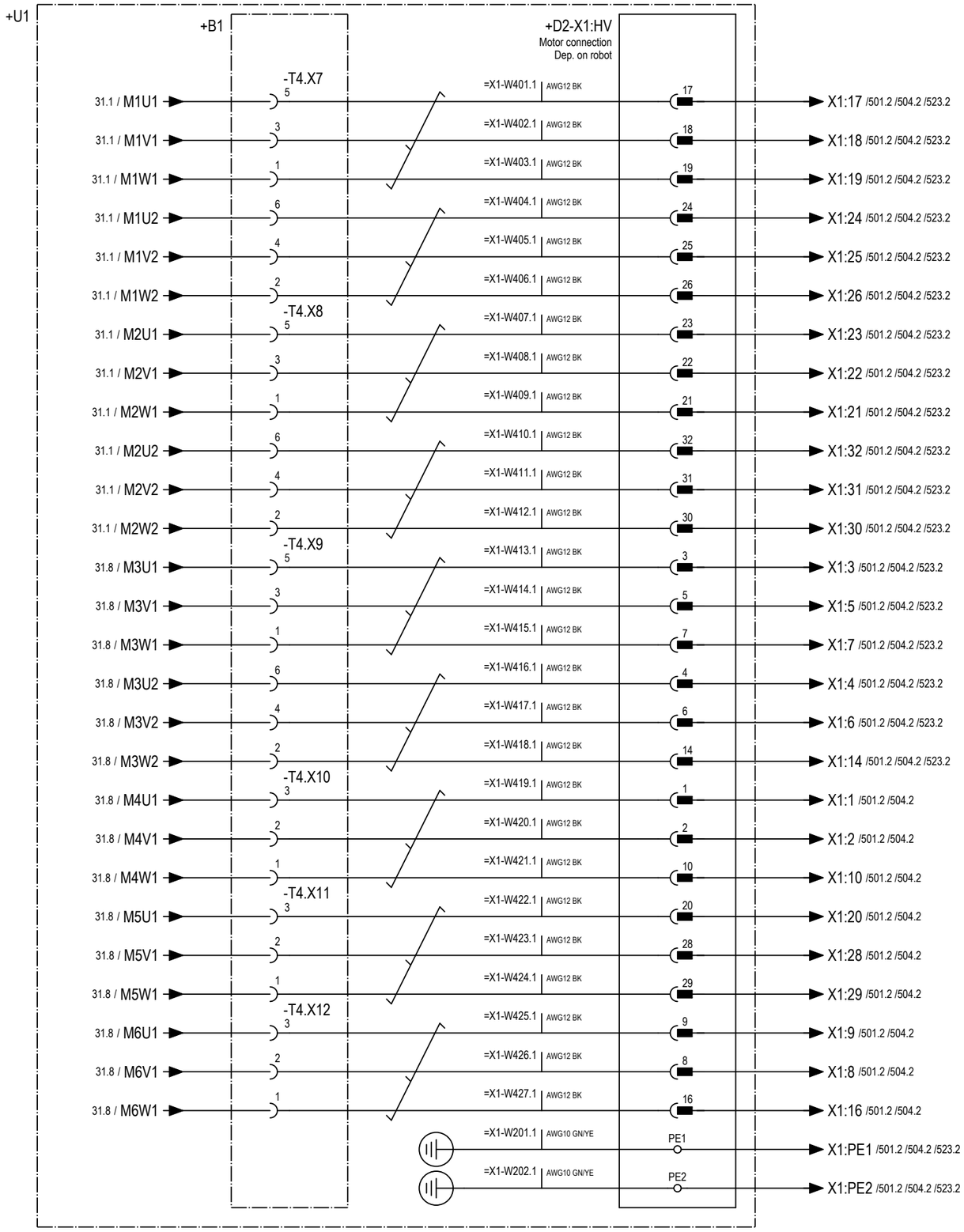

We reserve all rights in this document and in the information contained therein. Reproduction, use or disclosure to third parties without express authority is strictly forbidden. © Copyright ABB

Latest revision: See revision text	ABB	Lab/Office: RA/RDP	OmniCore V400XT Servo drive system HV	Status: APPROVED	Plant: = Location: + Sublocation: +
Prepared by, date: E. Mesaros	Approved by, date: M. Wadstein 2025-03-10			Document no. 3HAC082020-008	Rev. Ind 03
					Page 101 Next 102 Total 142

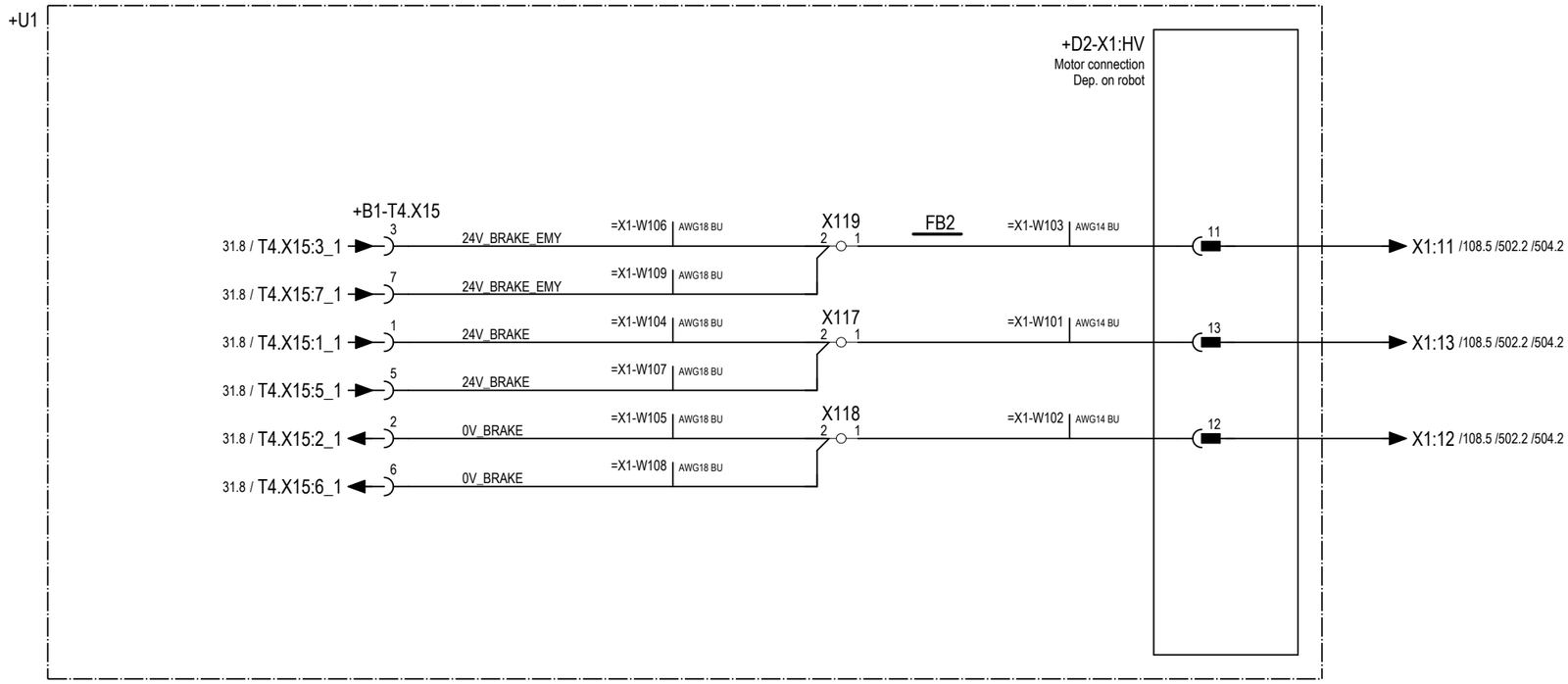

We reserve all rights in this document and in the information contained therein. Reproduction, use or disclosure to third parties without express authority is strictly forbidden. © Copyright ABB

Latest revision: See revision text	ABB	Lab/Office: RA/RDP	OmniCore V400XT Control cable HV	Status: APPROVED	Plant: = Location: + Sublocation: +
Prepared by, date: E. Mesaros	Approved by, date: M. Wadstein 2025-03-10			Document no. 3HAC082020-008	Rev. Ind 03

We reserve all rights in this document and in the information contained therein. Reproduction, use or disclosure to third parties without express authority is strictly forbidden. © Copyright ABB

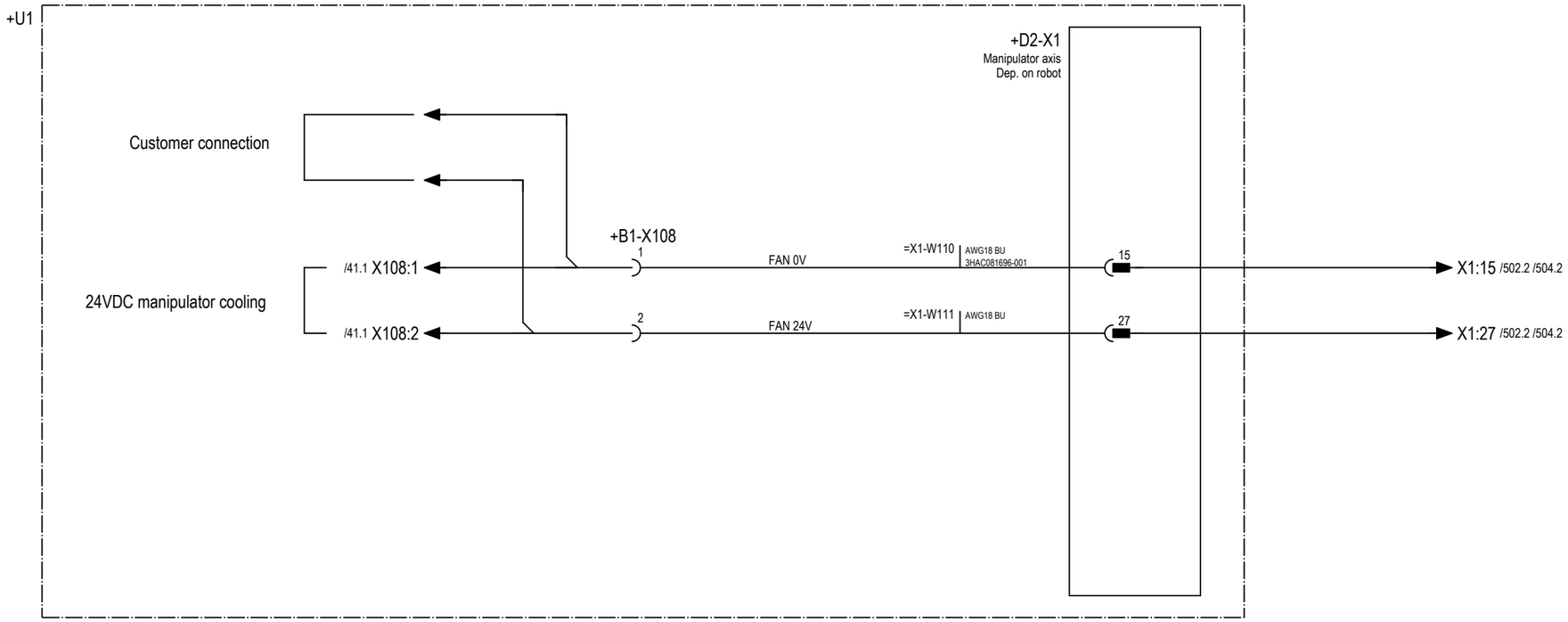

Latest revision: See revision text		Lab/Office: RA/RDP	OmniCore V400XT Control cable HV	Status: APPROVED	Plant: = Location: + Sublocation: +
Prepared by, date: E. Mesaros	Approved by, date: M. Wadstein 2025-03-10			Document no. 3HAC082020-008	Rev. Ind 03

We reserve all rights in this document and in the information contained therein. Reproduction, use or disclosure to third parties without express authority is strictly forbidden. © Copyright ABB

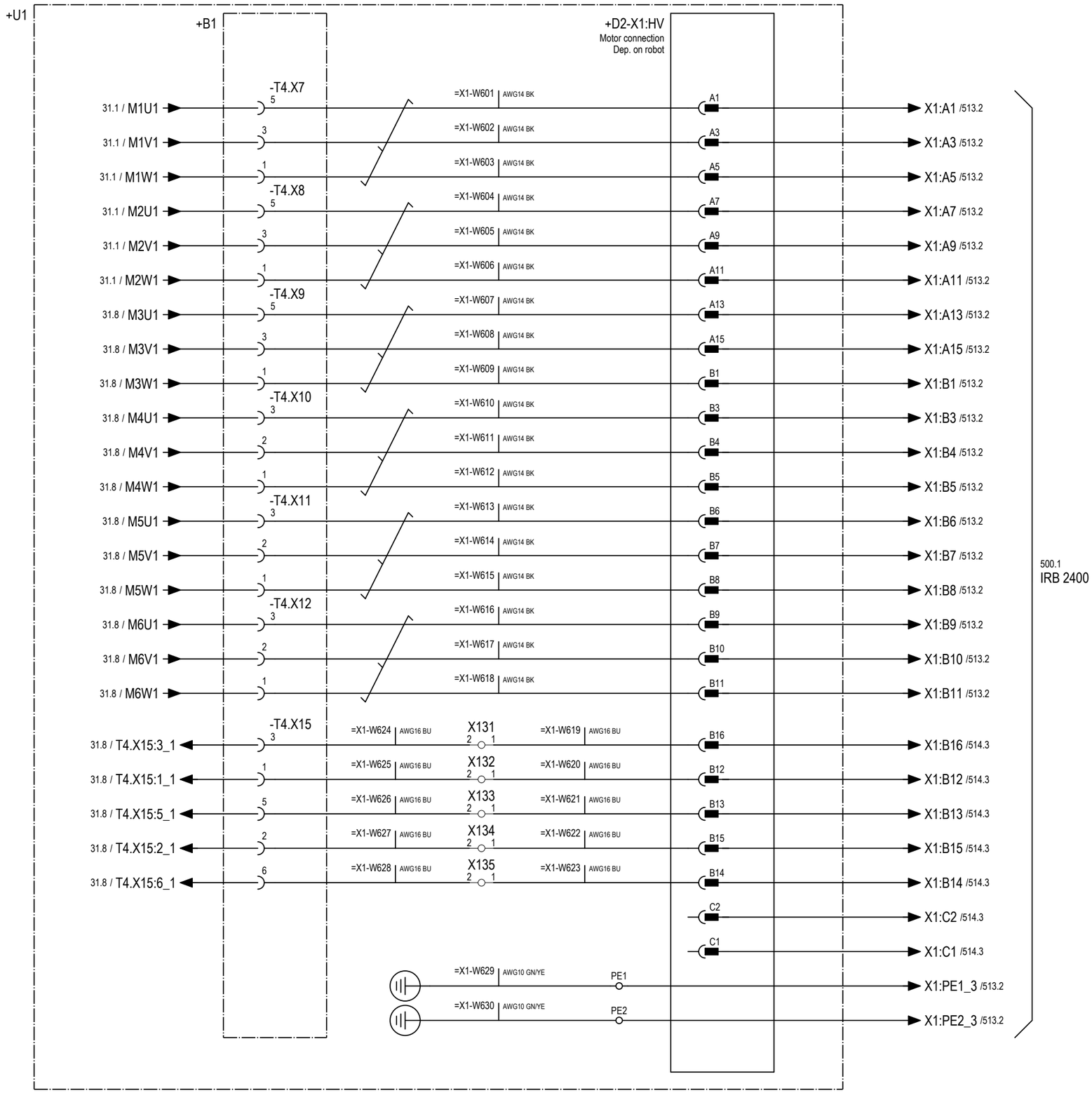

Latest revision: See revision text		Lab/Office: RA/RDP	OmniCore V400XT Servo drive system HV	Status: APPROVED	Plant: = Location: + Sublocation: +	
				Document no. 3HAC082020-008	Rev. Ind 03	Page 104 Next 105 Total 142
Prepared by, date: E. Mesaros	Approved by, date: M. Wadstein 2025-03-10					

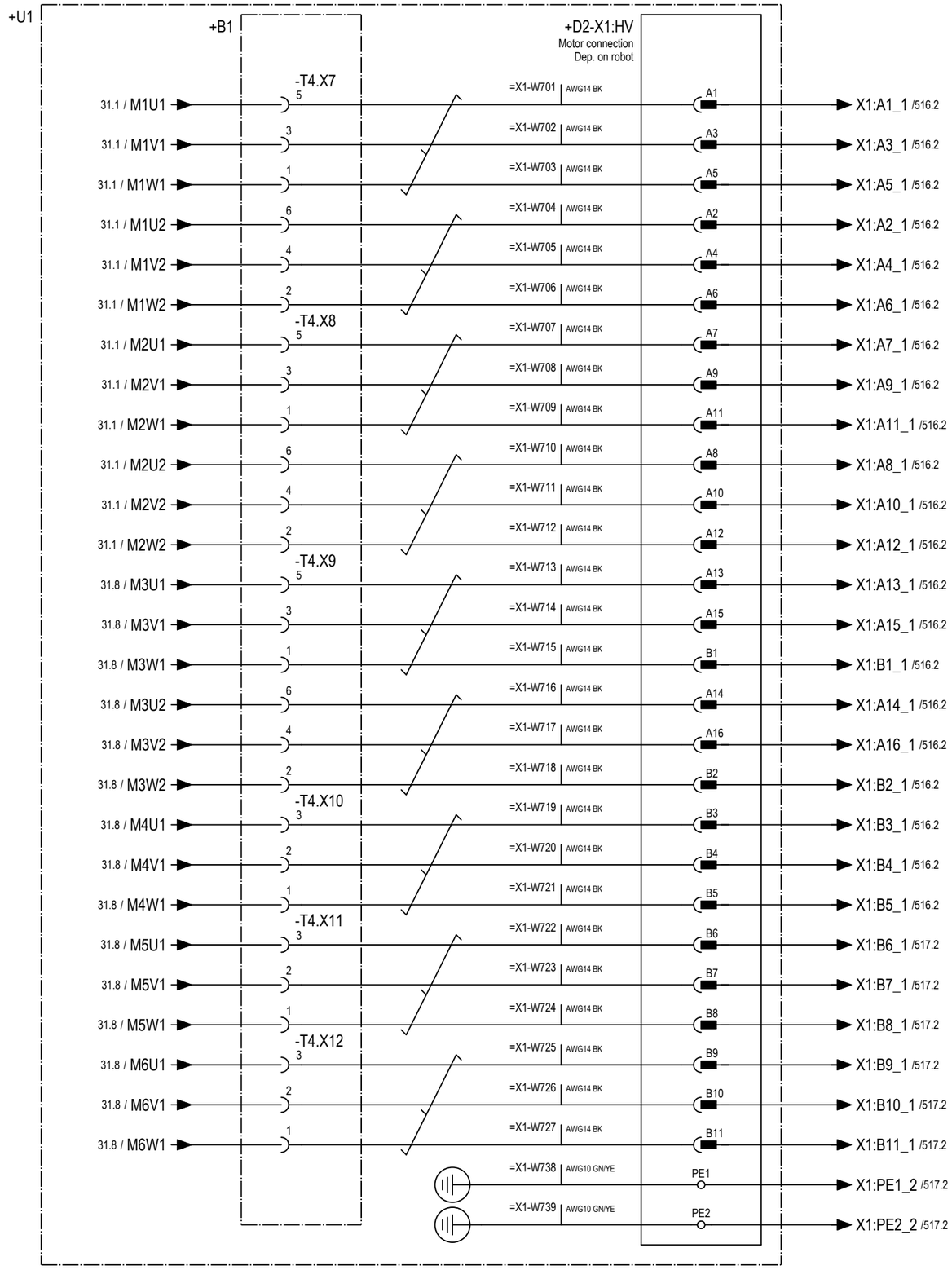

We reserve all rights in this document and in the information contained therein. Reproduction, use or disclosure to third parties without express authority is strictly forbidden. © Copyright ABB

Latest revision: See revision text	ABB	Lab/Office: RA/RDP	OmniCore V400XT Servo drive system HV	Status: APPROVED	Plant: = Location: + Sublocation: +
Prepared by, date: E. Mesaros	Approved by, date: M. Wadstein 2025-03-10			Document no. 3HAC082020-008	Rev. Ind 03
					Page 105 Next 106 Total 142

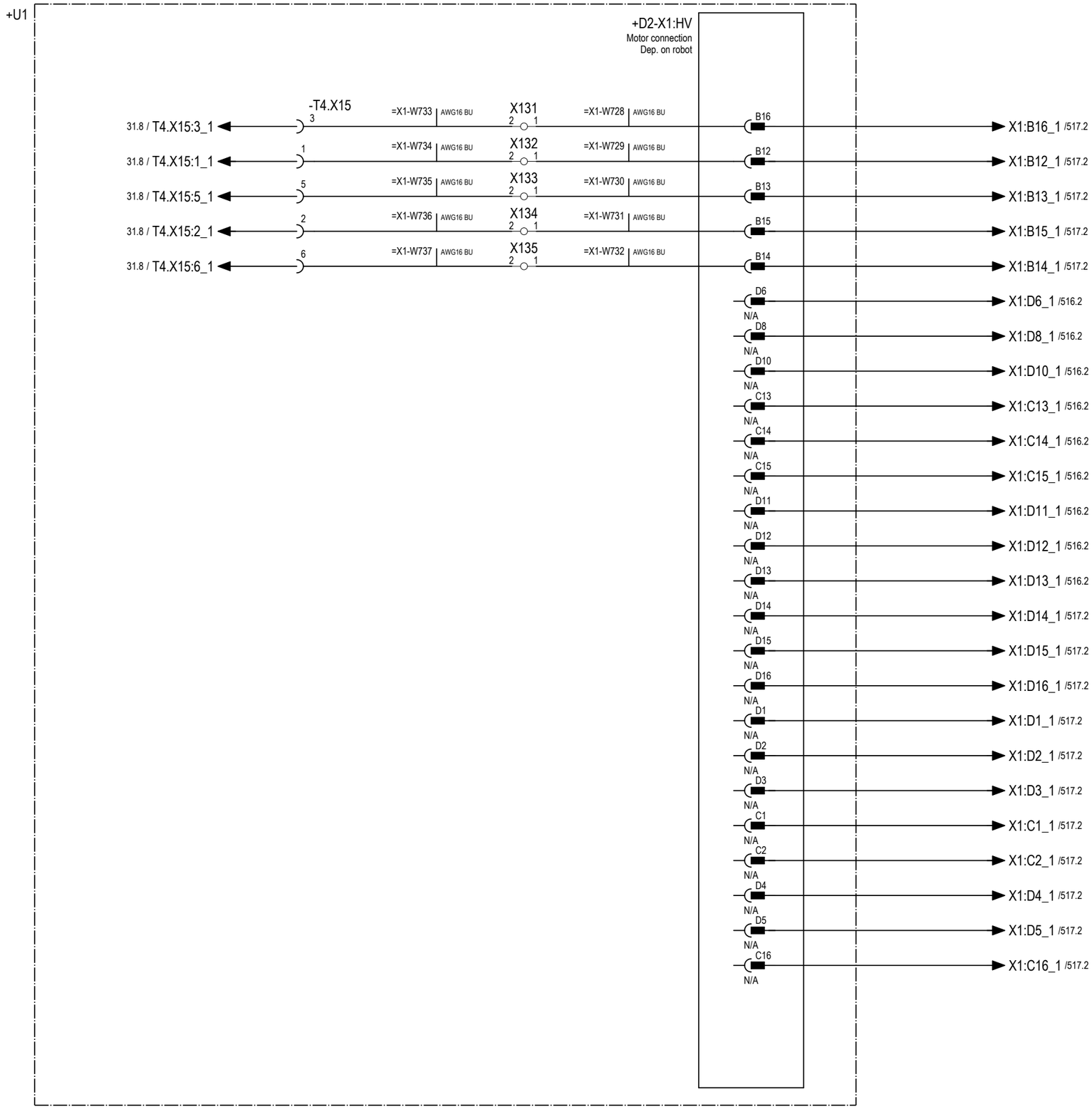

We reserve all rights in this document and in the information contained therein. Reproduction, use or disclosure to third parties without express authority is strictly forbidden. © Copyright ABB

Latest revision: See revision text		Lab/Office: RA/RDP	OmniCore V400XT Servo drive system HV	Status: APPROVED	Plant: = Location: + Sublocation: +
Prepared by, date: E. Mesaros	Approved by, date: M. Wadstein 2025-03-10			Document no. 3HAC082020-008	Rev. Ind 03

We reserve all rights in this document and in the information contained therein. Reproduction, use or disclosure to third parties without express authority is strictly forbidden. © Copyright ABB

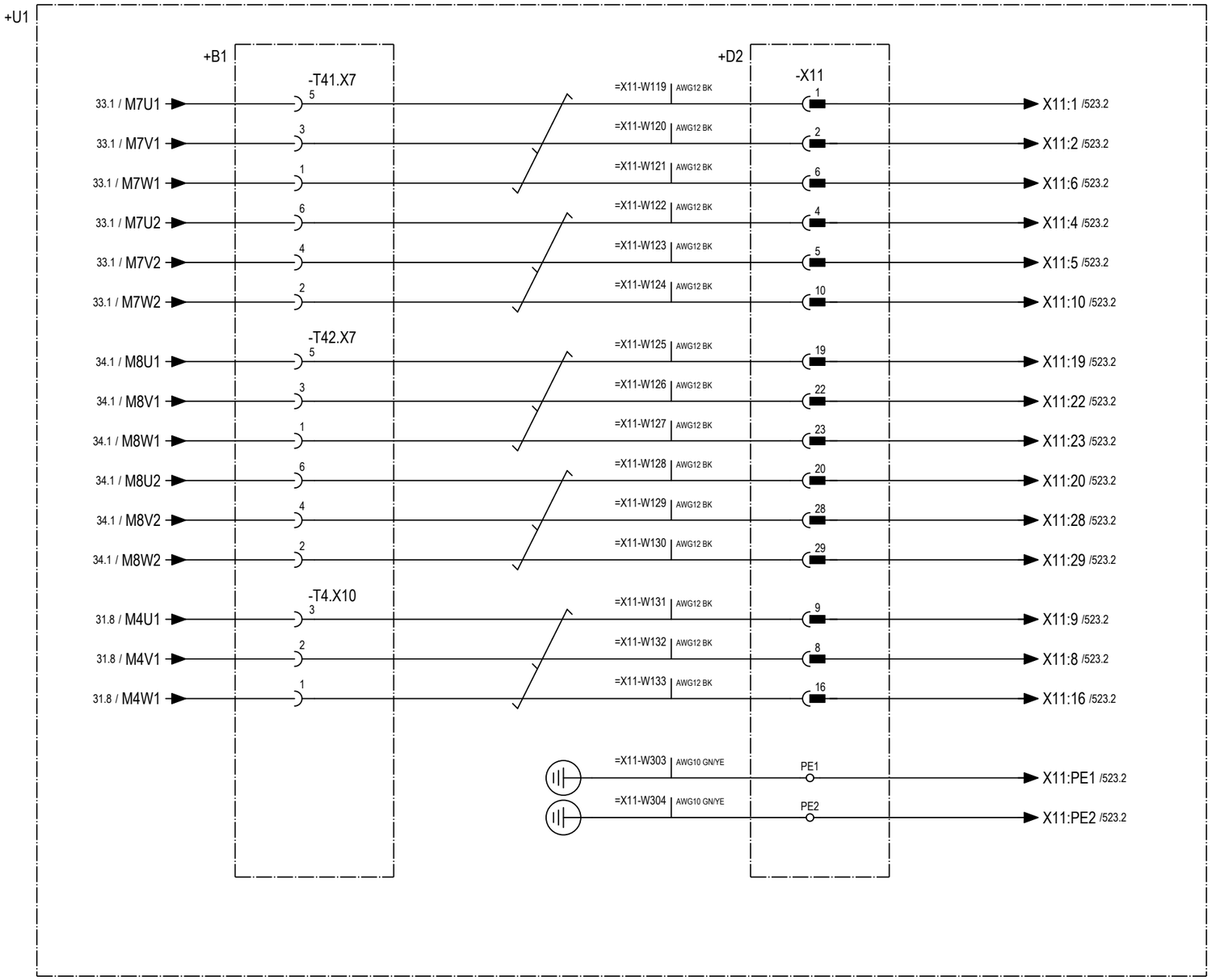

Latest revision: See revision text		Lab/Office: RA/RDP	OmniCore V400XT Servo drive system HV	Status: APPROVED	Plant: = Location: + Sublocation: +	
Prepared by, date: E. Mesaros	Approved by, date: M. Wadstein 2025-03-10			Document no. 3HAC082020-008	Rev. Ind 03	Page 107 Next 108 Total 142

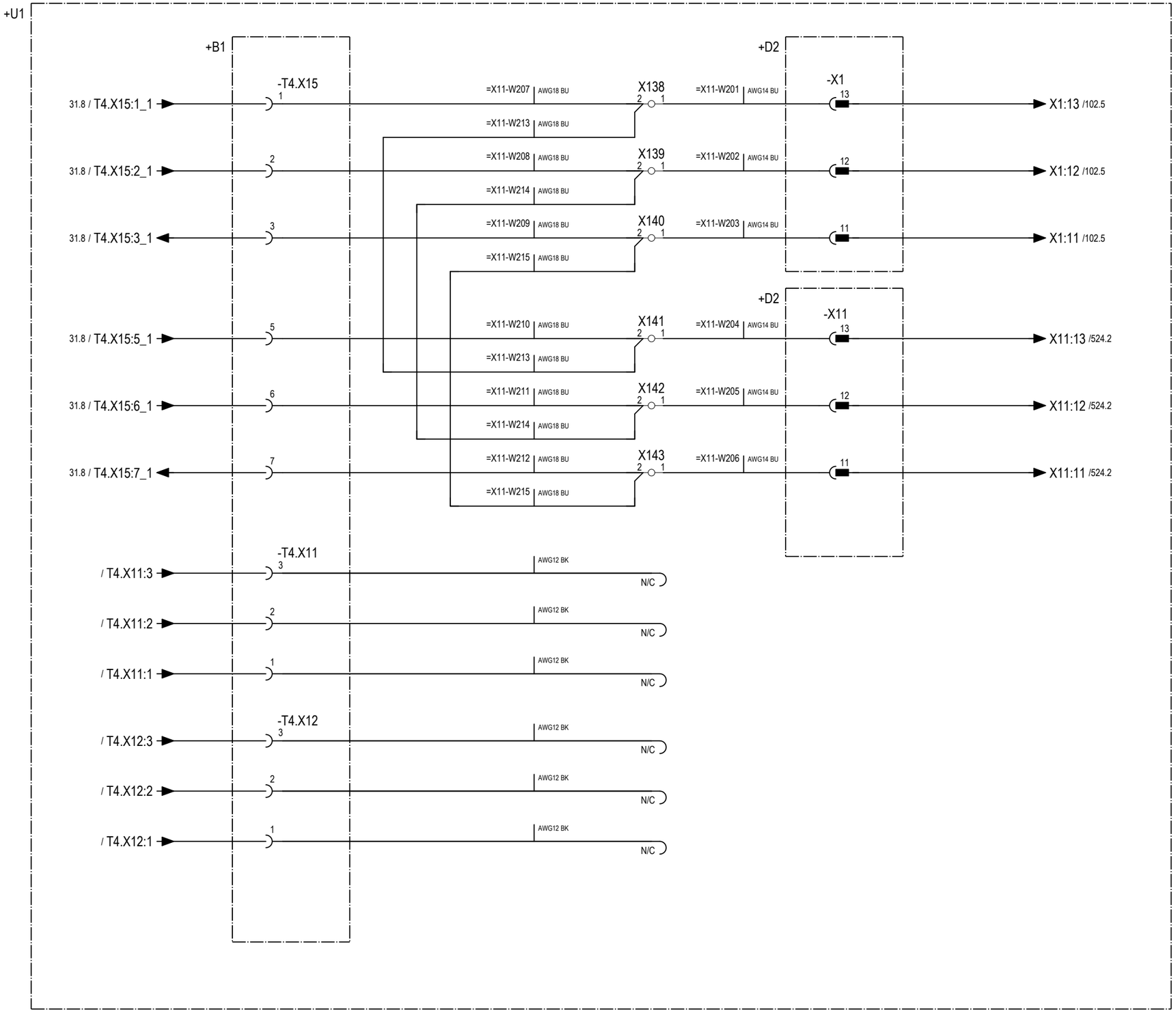

We reserve all rights in this document and in the information contained therein. Reproduction, use or disclosure to third parties without express authority is strictly forbidden. © Copyright ABB

Latest revision: See revision text	ABB	Lab/Office: RA/RDP	OmniCore V400XT Control cable HV	Status: APPROVED	Plant: = Location: + Sublocation: +
Prepared by, date: E. Mesaros	Approved by, date: M. Wadstein 2025-03-10			Document no. 3HAC082020-008	Rev. Ind 03

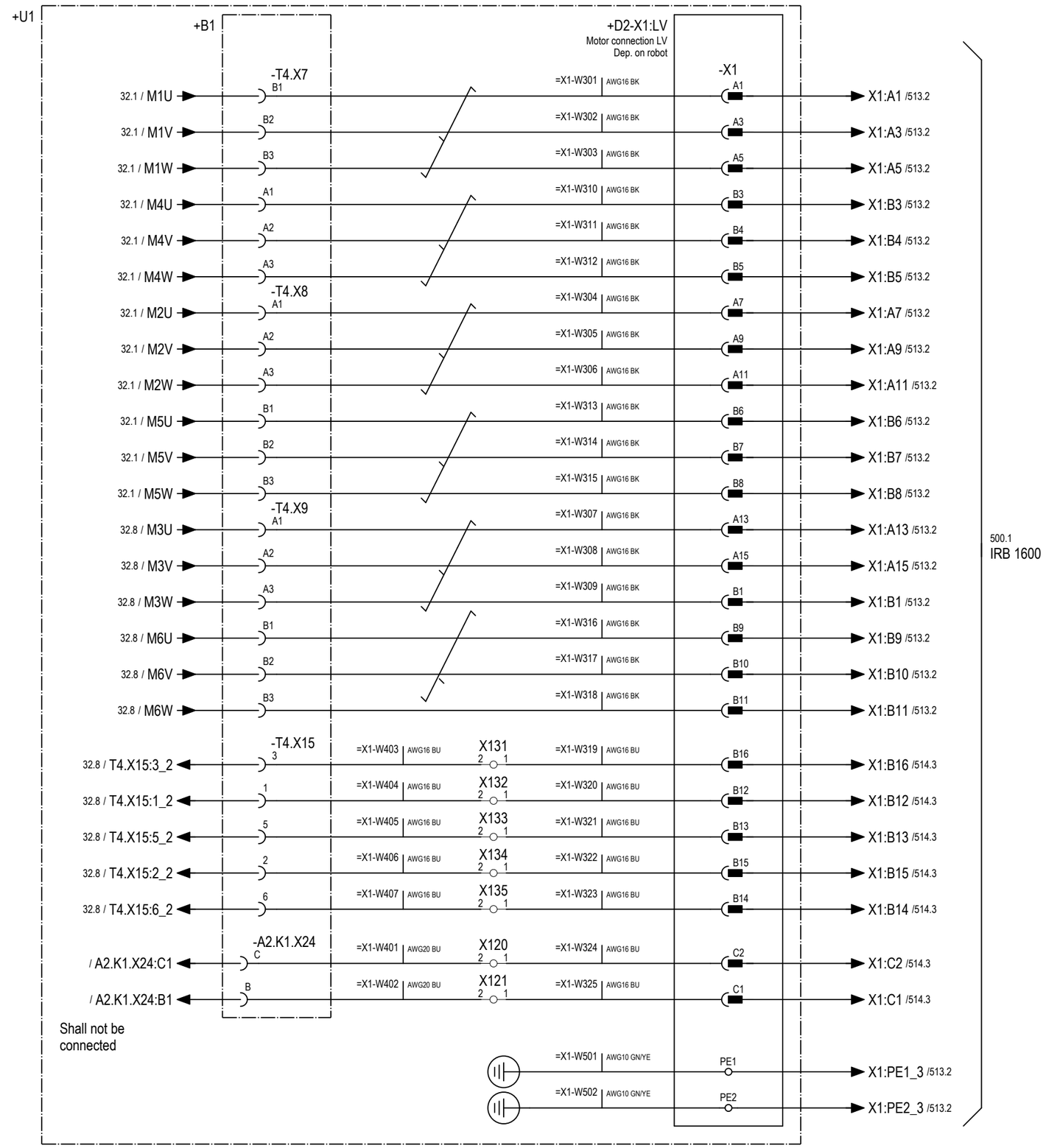

We reserve all rights in this document and in the information contained therein. Reproduction, use or disclosure to third parties without express authority is strictly forbidden. © Copyright ABB

Latest revision: See revision text		ABB	Lab/Office: RA/RDP	OmniCore V400XT Servo drive system LV	Status: APPROVED	Plant: = Location: + Sublocation: +
Prepared by, date: E. Mesaros	Approved by, date: M. Wadstein 2025-03-10				Document no. 3HAC082020-008	Rev. Ind 03

We reserve all rights in this document and in the information contained therein. Reproduction, use or disclosure to third parties without express authority is strictly forbidden. © Copyright ABB

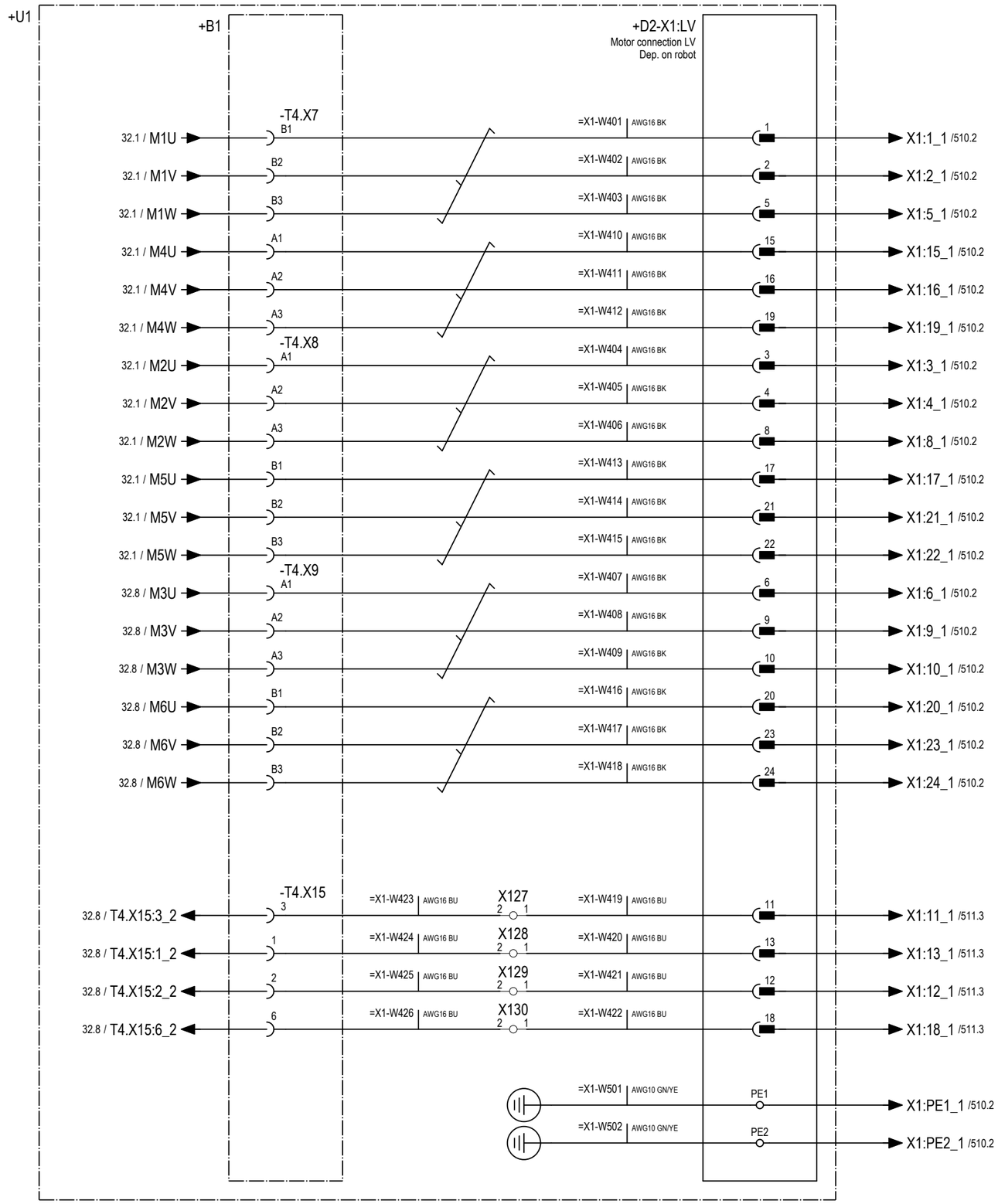

Latest revision: See revision text		Lab/Office: RA/RDP	OmniCore V400XT Servo drive system LV	Status: APPROVED	Plant: = Location: + Sublocation: +
Prepared by, date: E. Mesaros	Approved by, date: M. Wadstein 2025-03-10			Document no. 3HAC082020-008	Rev. Ind 03

Page	110
Next	111
Total	142

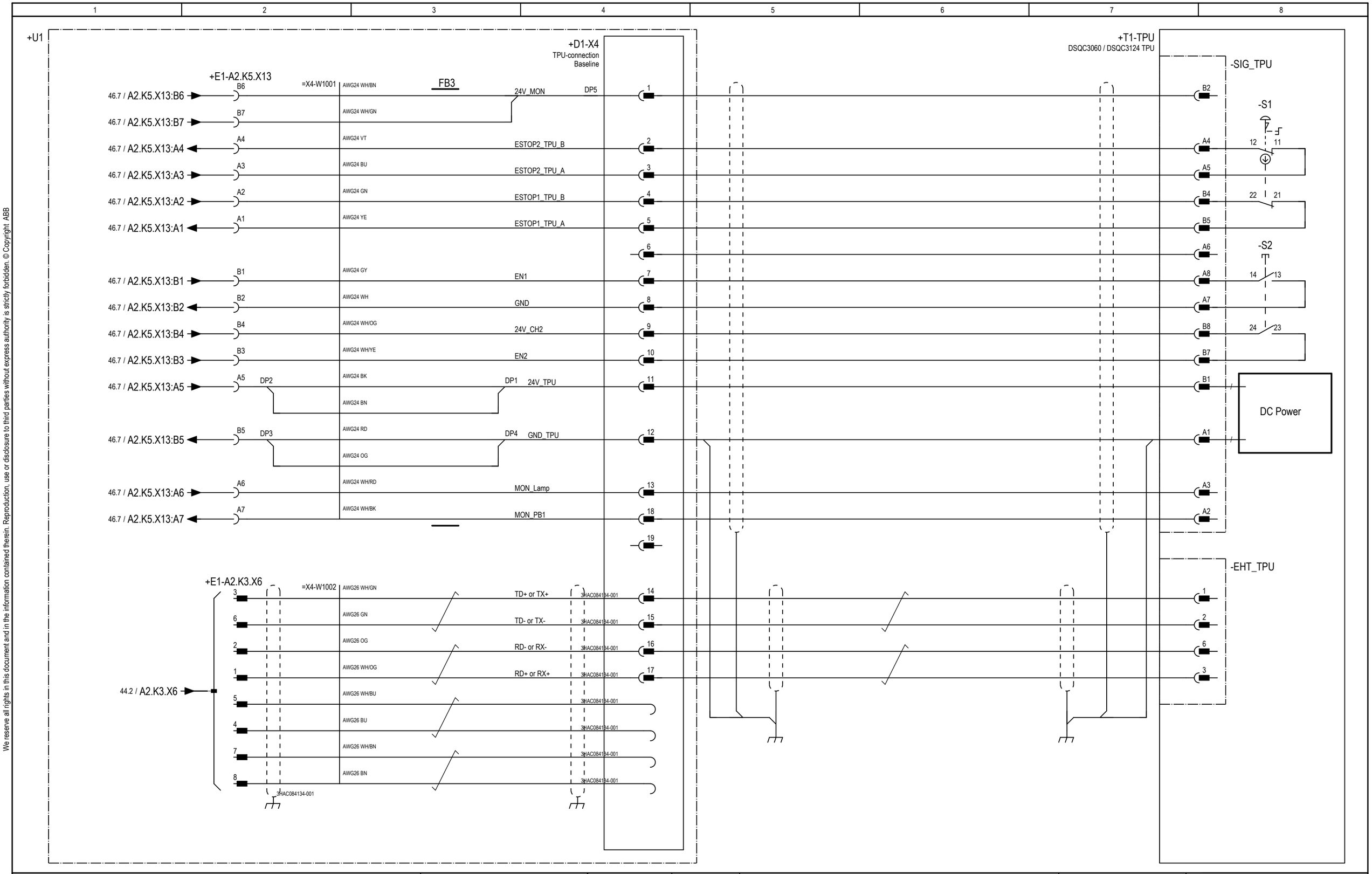

We reserve all rights in this document and in the information contained therein. Reproduction, use or disclosure to third parties without express authority is strictly forbidden. © Copyright ABB

Latest revision: See revision text	ABB	Lab/Office: RA/RDP	OmniCore V400XT TPU connection	Status: APPROVED	Plant: = Location: + Sublocation: +
Prepared by, date: E. Mesaros	Approved by, date: M. Wadstein 2025-03-10			Document no. 3HAC082020-008	Rev. Ind 03
					Page 111 Next 112 Total 142

We reserve all rights in this document and in the information contained therein. Reproduction, use or disclosure to third parties without express authority is strictly forbidden. © Copyright ABB

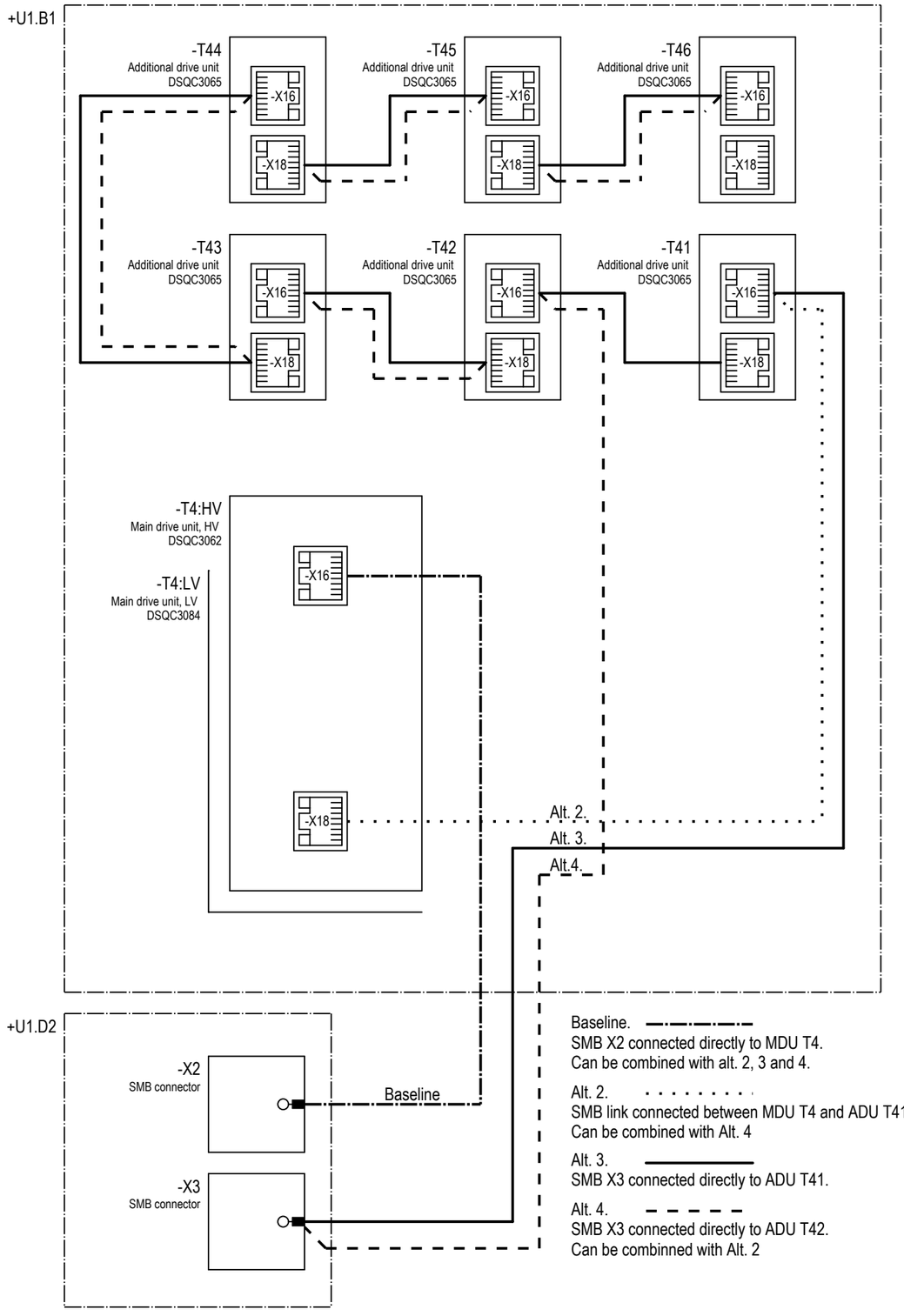

Baseline.
SMB X2 connected directly to MDU T4.
Can be combined with alt. 2, 3 and 4.

Alt. 2.
SMB link connected between MDU T4 and ADU T41.
Can be combined with Alt. 4

Alt. 3.
SMB X3 connected directly to ADU T41.

Alt. 4.
SMB X3 connected directly to ADU T42.
Can be combinned with Alt. 2

These connection examples only applies for IRB 8700

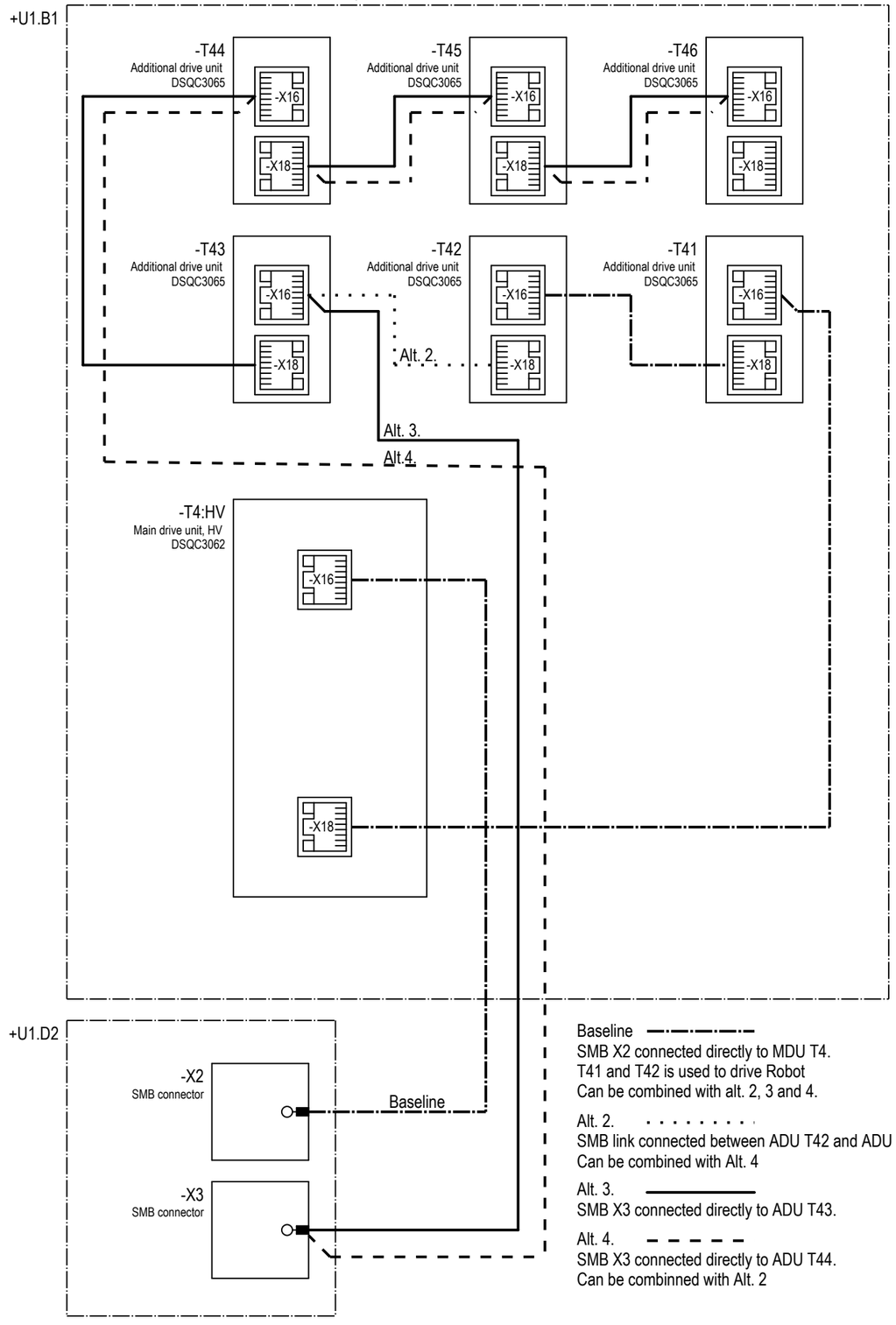

Baseline
SMB X2 connected directly to MDU T4.
T41 and T42 is used to drive Robot
Can be combined with alt. 2, 3 and 4.

Alt. 2.
SMB link connected between ADU T42 and ADU T43.
Can be combined with Alt. 4

Alt. 3.
SMB X3 connected directly to ADU T43.

Alt. 4.
SMB X3 connected directly to ADU T44.
Can be combinned with Alt. 2

Latest revision: See revision text		Lab/Office: RA/RDP	OmniCore V400XT SMB connector overwiev	Status: APPROVED	Plant: = Location: + Sublocation: +
Prepared by, date: E. Mesaros	Approved by, date: M. Wadstein 2025-03-10			Document no. 3HAC082020-008	Rev. Ind 03

We reserve all rights in this document and in the information contained therein. Reproduction, use or disclosure to third parties without express authority is strictly forbidden. © Copyright ABB

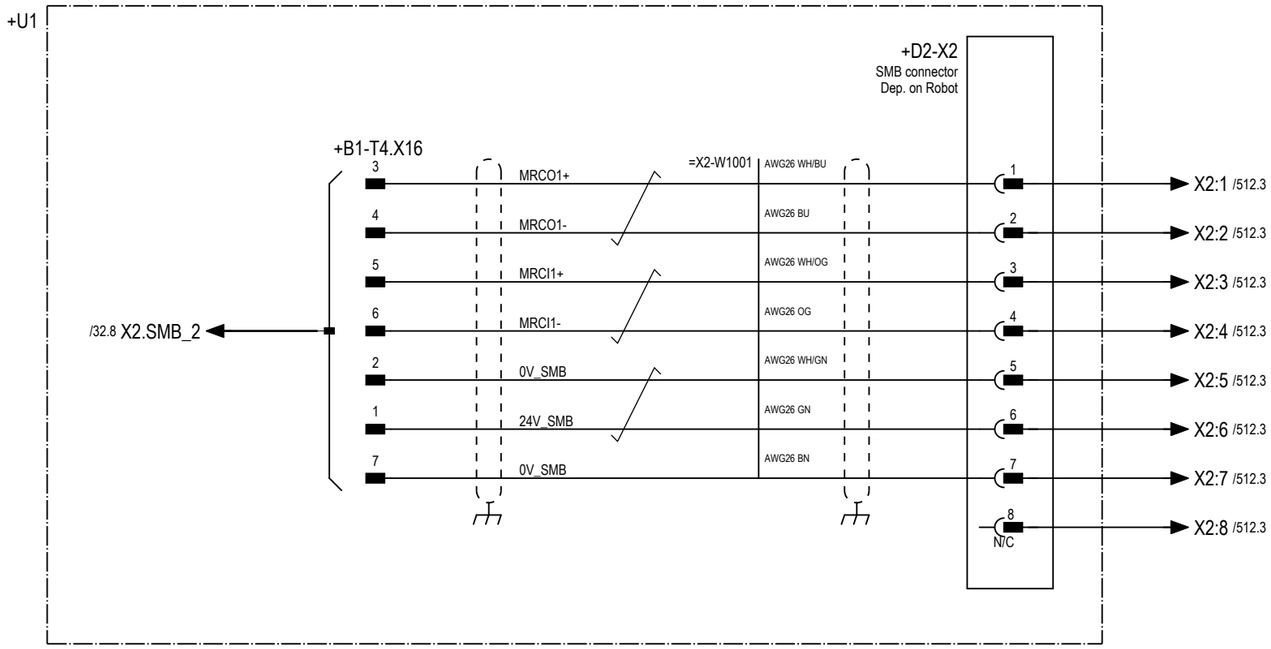

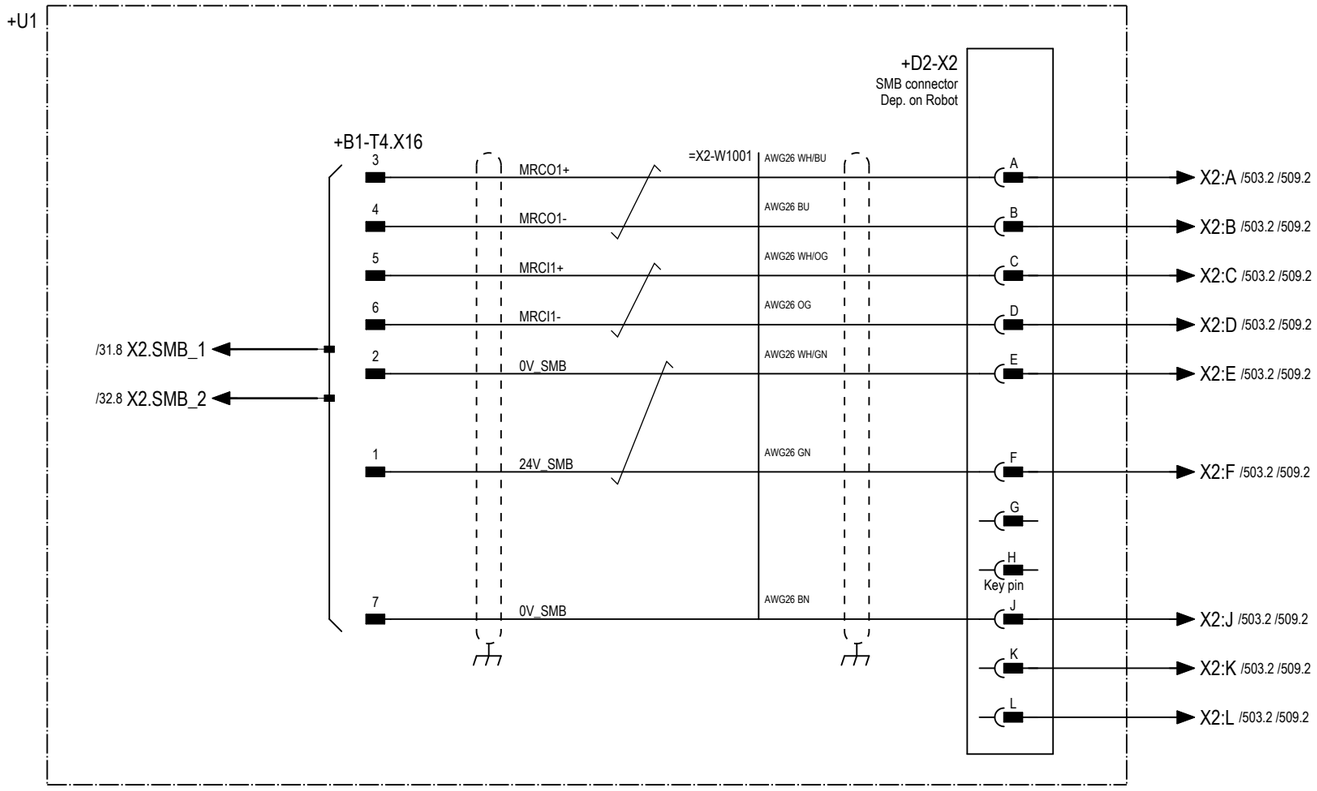

Latest revision: See revision text		Lab/Office: RA/RDP	OmniCore V400XT SMB connector	Status: APPROVED	Plant: = Location: + Sublocation: +
Prepared by, date: E. Mesaros	Approved by, date: M. Wadstein 2025-03-10			Document no. 3HAC082020-008	Rev. Ind 03

Page	113
Next	114
Total	142

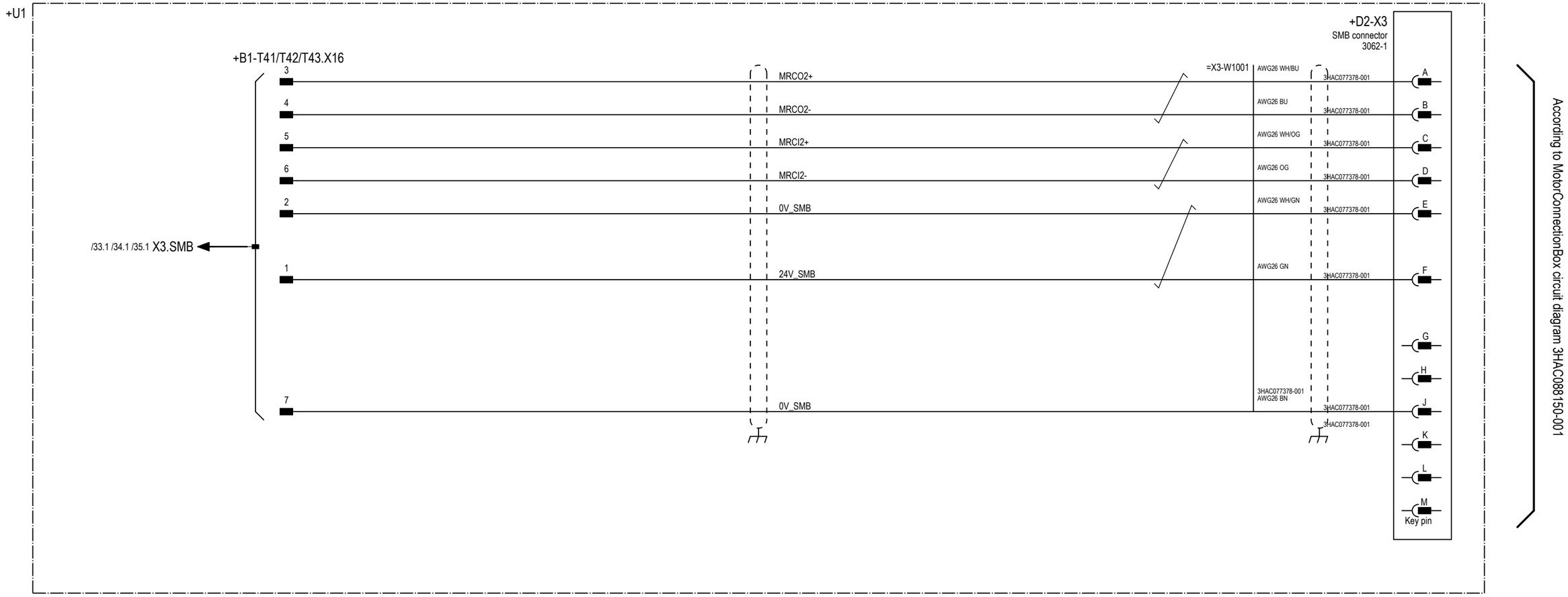

We reserve all rights in this document and in the information contained therein. Reproduction, use or disclosure to third parties without express authority is strictly forbidden. © Copyright ABB

Latest revision: See revision text		Lab/Office: RA/RDP	OmniCore V400XT SMB connector	Status: APPROVED	Plant: =	
					Location: +	
					Sublocation: +	
Prepared by, date: E. Mesaros	Approved by, date: M. Wadstein 2025-03-10			Document no. 3HAC082020-008	Rev. Ind 03	Page 114
						Next 115
						Total 142

We reserve all rights in this document and in the information contained therein. Reproduction, use or disclosure to third parties without express authority is strictly forbidden. © Copyright ABB

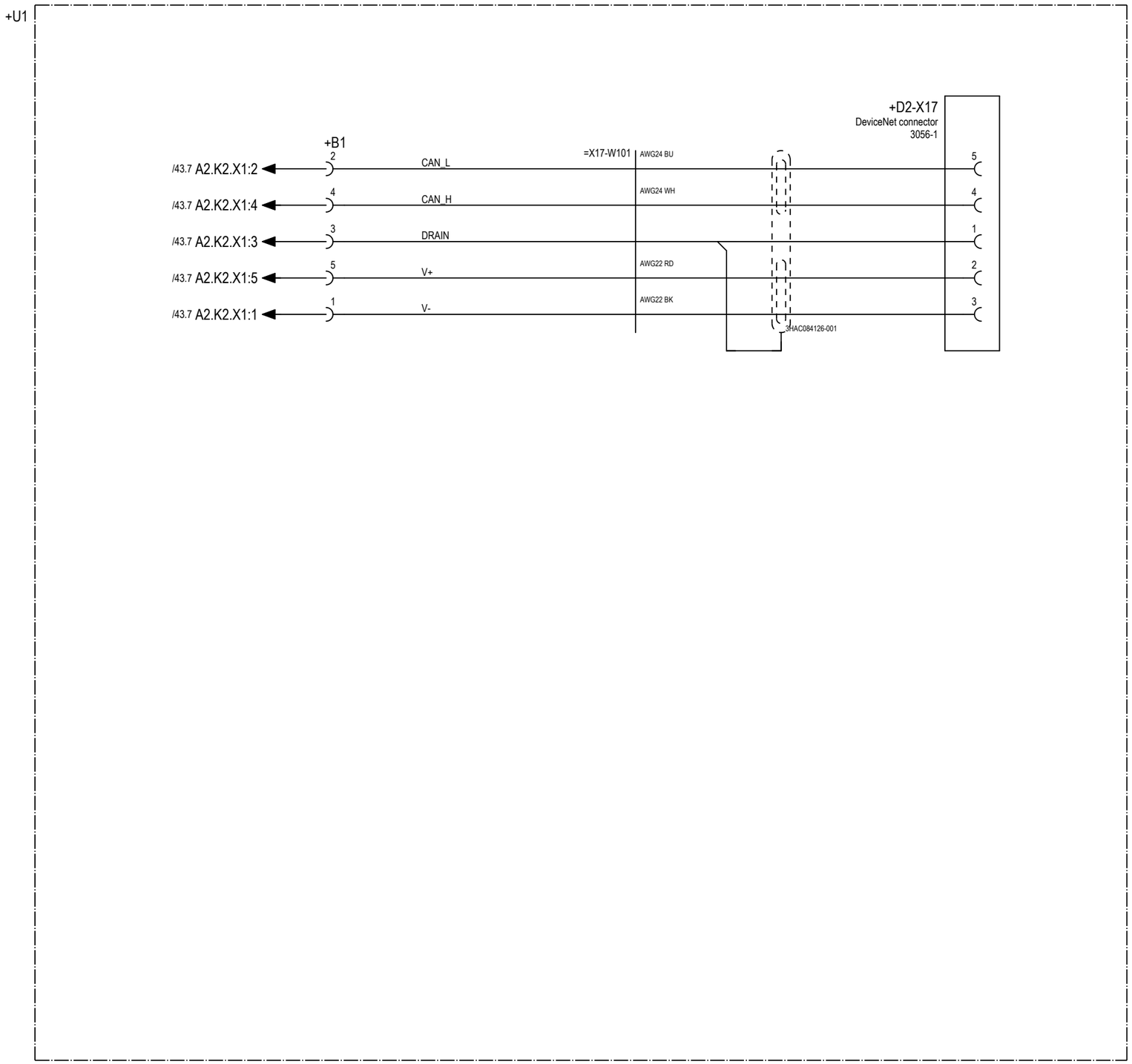

Latest revision: See revision text		Lab/Office: RA/RDP	OmniCore V400XT DeviceNet connector	Status: APPROVED	Plant: = Location: + Sublocation: +	
Prepared by, date: E. Mesaros	Approved by, date: M. Wadstein 2025-03-10			Document no. 3HAC082020-008	Rev. Ind 03	Page 115 Next 116 Total 142

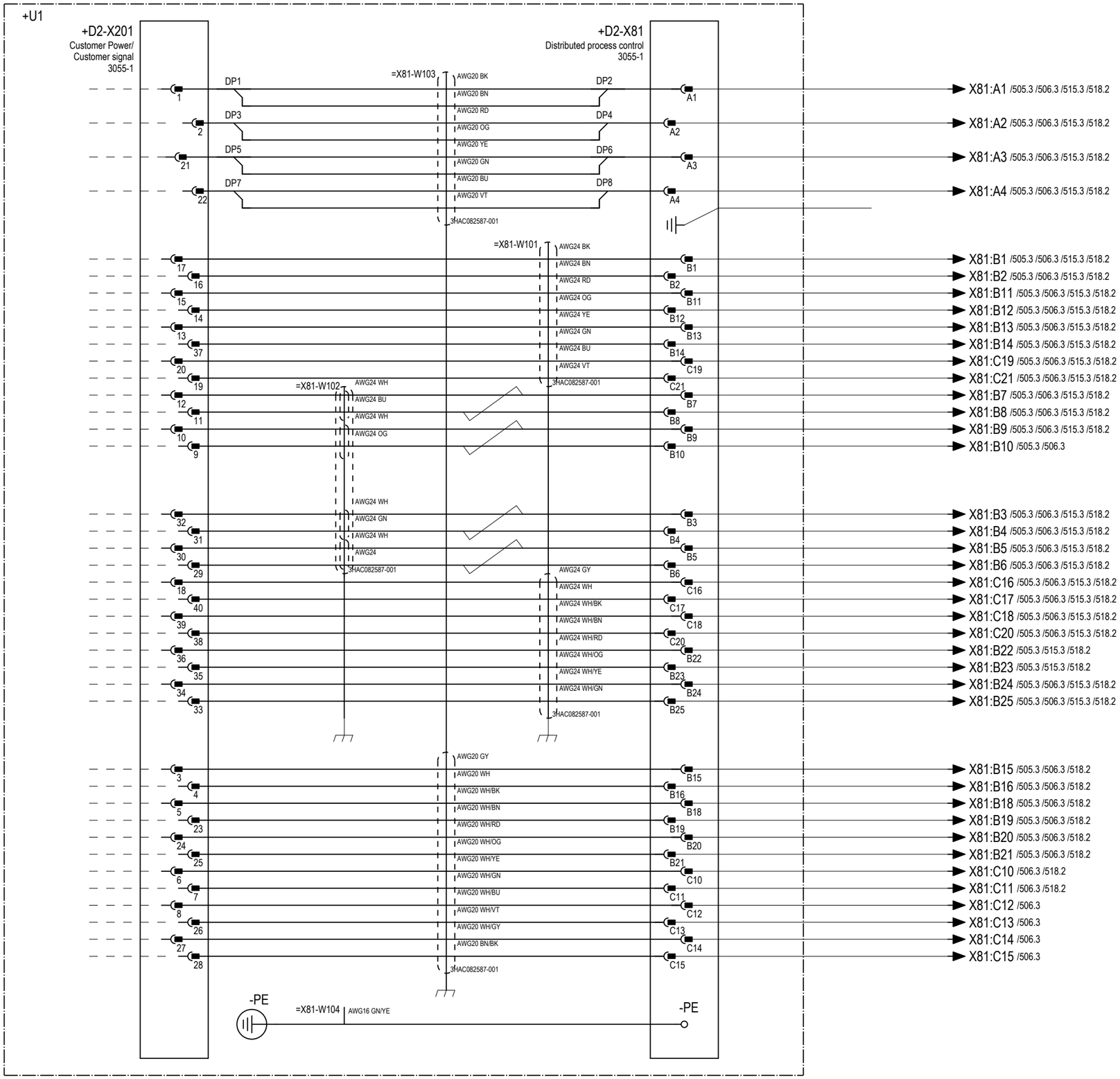

We reserve all rights in this document and in the information contained therein. Reproduction, use or disclosure to third parties without express authority is strictly forbidden. © Copyright ABB

Latest revision: See revision text		Lab/Office: RA/RDP	OmniCore V400XT Customer power/signal	Status: APPROVED	Plant: = Location: + Sublocation: +
Prepared by, date: E. Mesaros	Approved by, date: M. Wadstein 2025-03-10			Document no. 3HAC082020-008	Rev. Ind 03

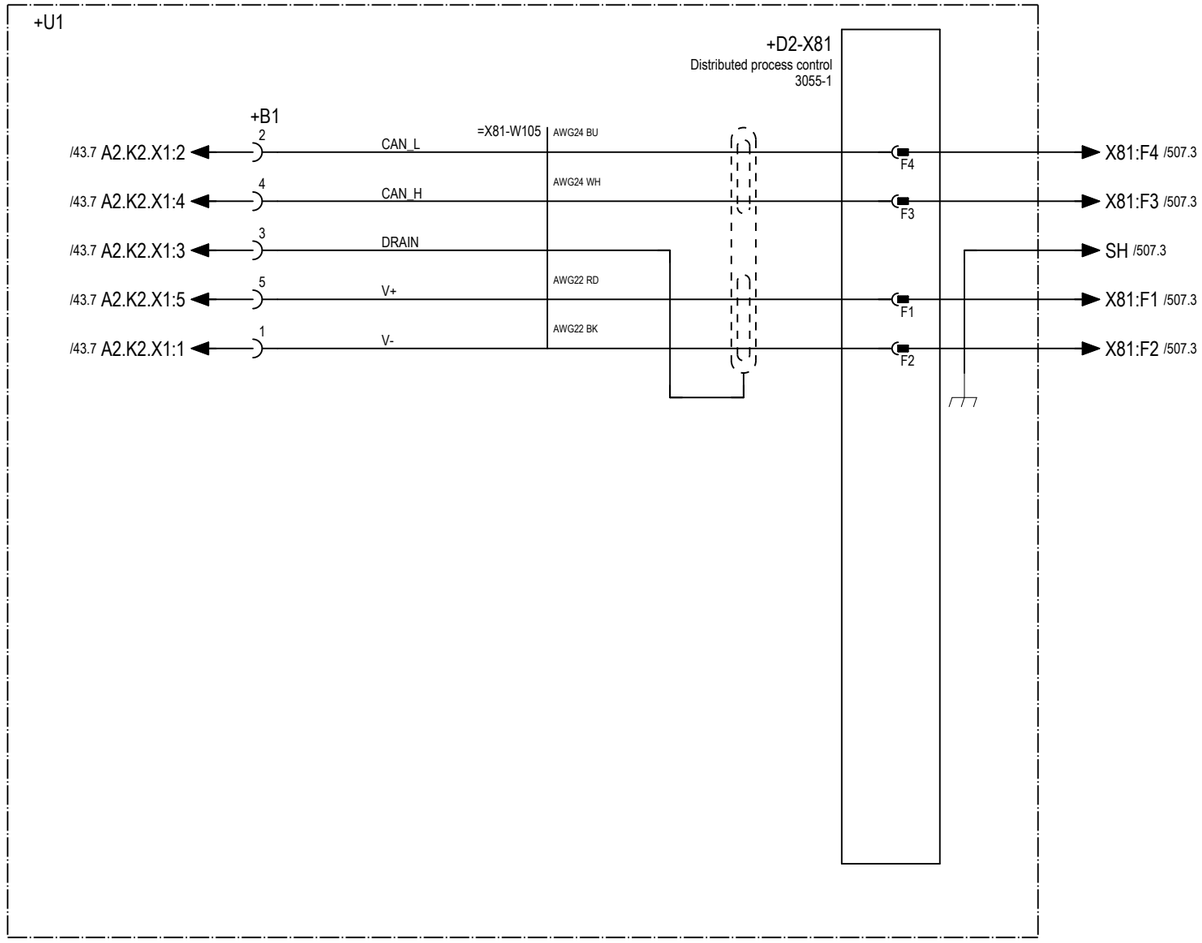

We reserve all rights in this document and in the information contained therein. Reproduction, use or disclosure to third parties without express authority is strictly forbidden. © Copyright ABB

Latest revision: See revision text	ABB	Lab/Office: RA/RDP	OmniCore V400XT Customer power/signal	Status: APPROVED	Plant: = Location: + Sublocation: +
Prepared by, date: E. Mesaros	Approved by, date: M. Wadstein 2025-03-10			Document no. 3HAC082020-008	Rev. Ind 03

We reserve all rights in this document and in the information contained therein. Reproduction, use or disclosure to third parties without express authority is strictly forbidden. © Copyright ABB

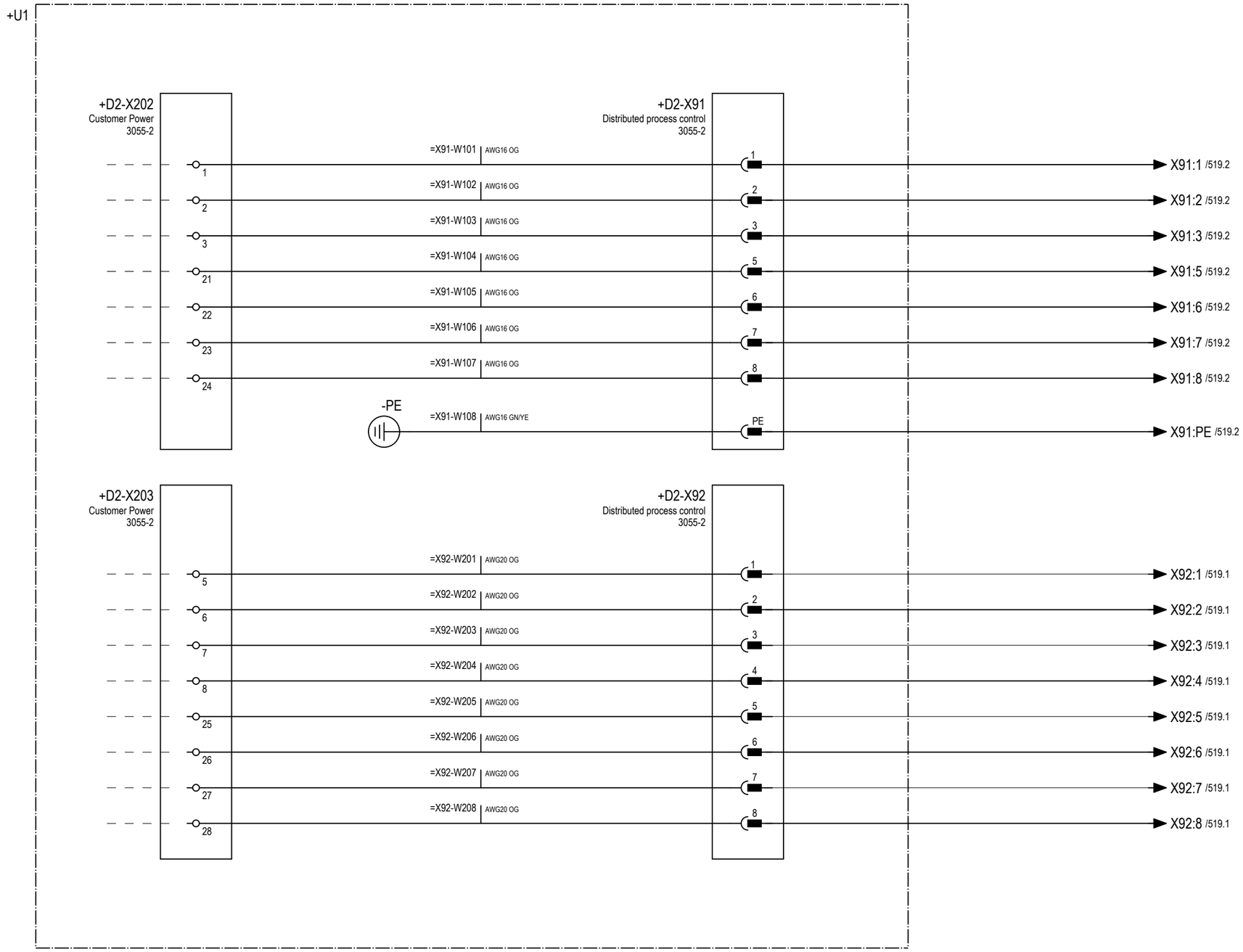

Latest revision: See revision text		Lab/Office: RA/RDP	OmniCore V400XT Customer power/signal	Status: APPROVED	Plant: = Location: + Sublocation: +
				Document no. 3HAC082020-008	Rev. Ind 03
Prepared by, date: E. Mesaros	Approved by, date: M. Wadstein 2025-03-10				Page 118 Next 119 Total 142

We reserve all rights in this document and in the information contained therein. Reproduction, use or disclosure to third parties without express authority is strictly forbidden. © Copyright ABB

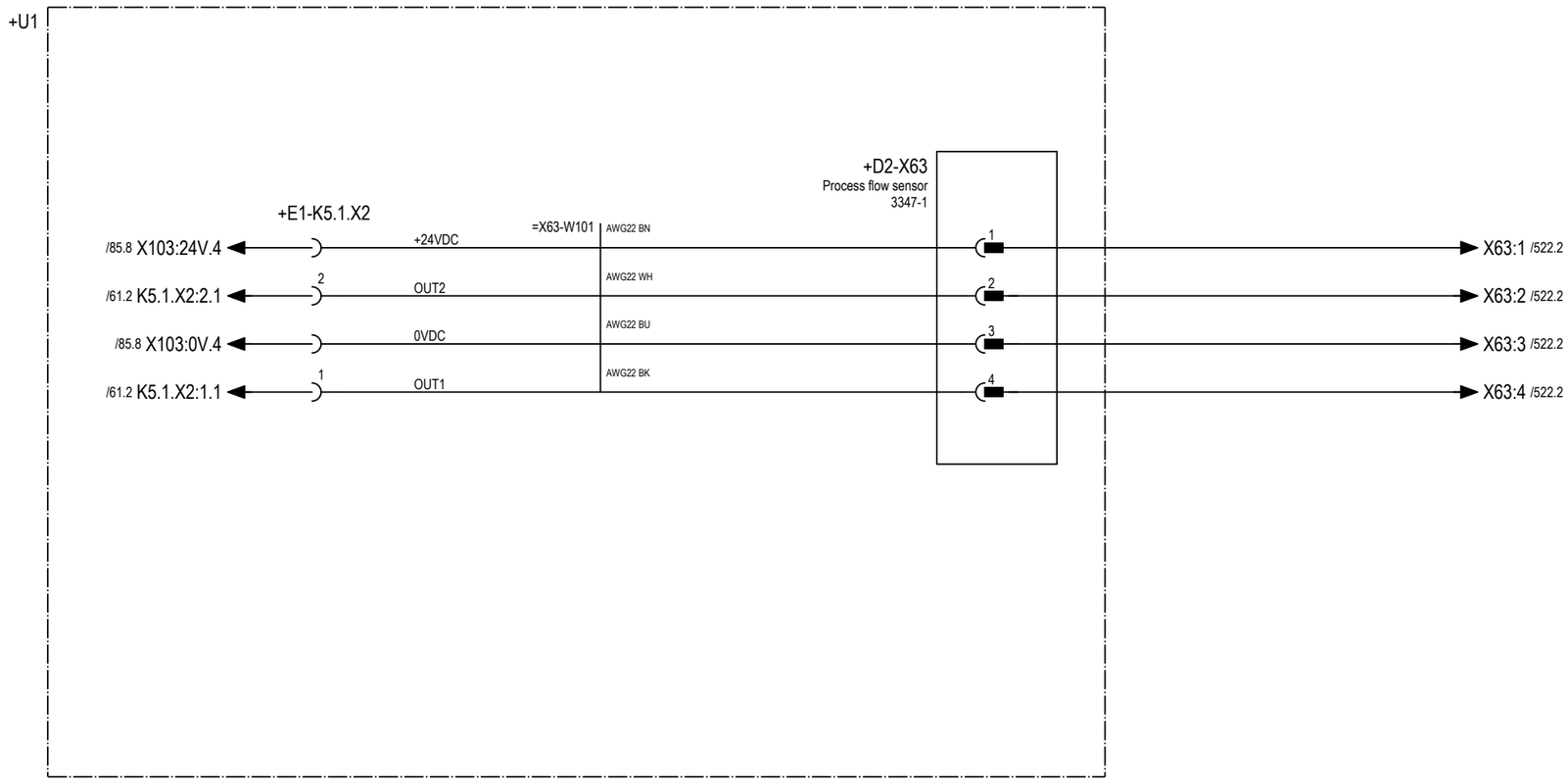

Latest revision: See revision text		Lab/Office: RA/RDP	OmniCore V400XT Process flow sensor	Status: APPROVED	Plant: = Location: + Sublocation: +	
Prepared by, date: E. Mesaros	Approved by, date: M. Wadstein 2025-03-10			Document no. 3HAC082020-008	Rev. Ind 03	Page 119 Next 120 Total 142

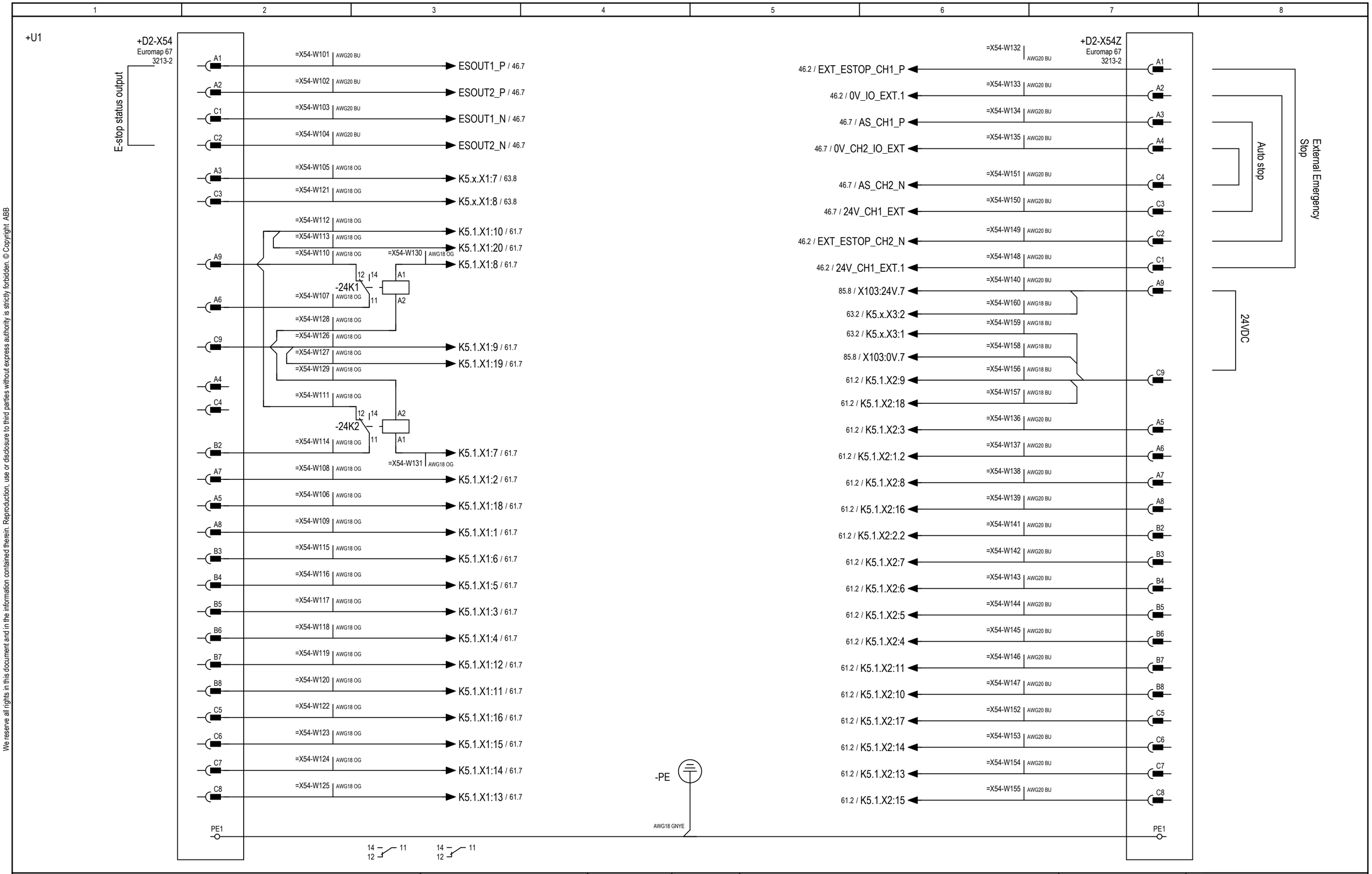

Latest revision: See revision text		Lab/Office: RA/RDP	OmniCore V400XT Euromap67	Status: APPROVED	Plant: = Location: + Sublocation: +
Prepared by, date: E. Mesaros	Approved by, date: M. Wadstein 2025-03-10			Document no. 3HAC082020-008	Rev. Ind 03
					Page 120 Next 121 Total 142

We reserve all rights in this document and in the information contained therein. Reproduction, use or disclosure to third parties without express authority is strictly forbidden. © Copyright ABB

We reserve all rights in this document and in the information contained therein. Reproduction, use or disclosure to third parties without express authority is strictly forbidden. © Copyright ABB

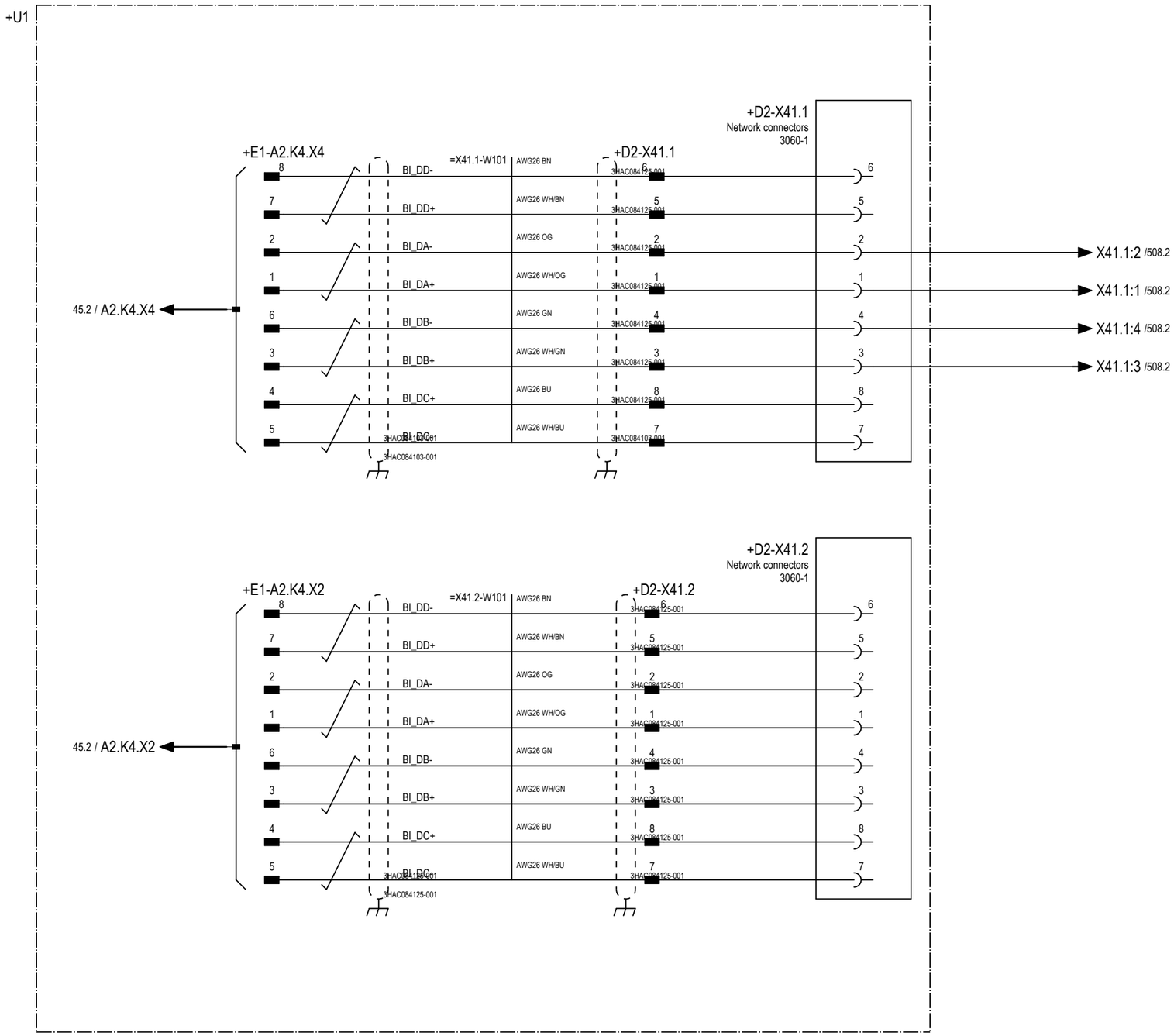

Latest revision: See revision text		ABB	Lab/Office: RA/RDP	OmniCore V400XT Network options	Status: APPROVED	Plant: = Location: + Sublocation: +
Prepared by, date: E. Mesaros	Approved by, date: M. Wadstein 2025-03-10				Document no. 3HAC082020-008	Rev. Ind 03

We reserve all rights in this document and in the information contained therein. Reproduction, use or disclosure to third parties without express authority is strictly forbidden. © Copyright ABB

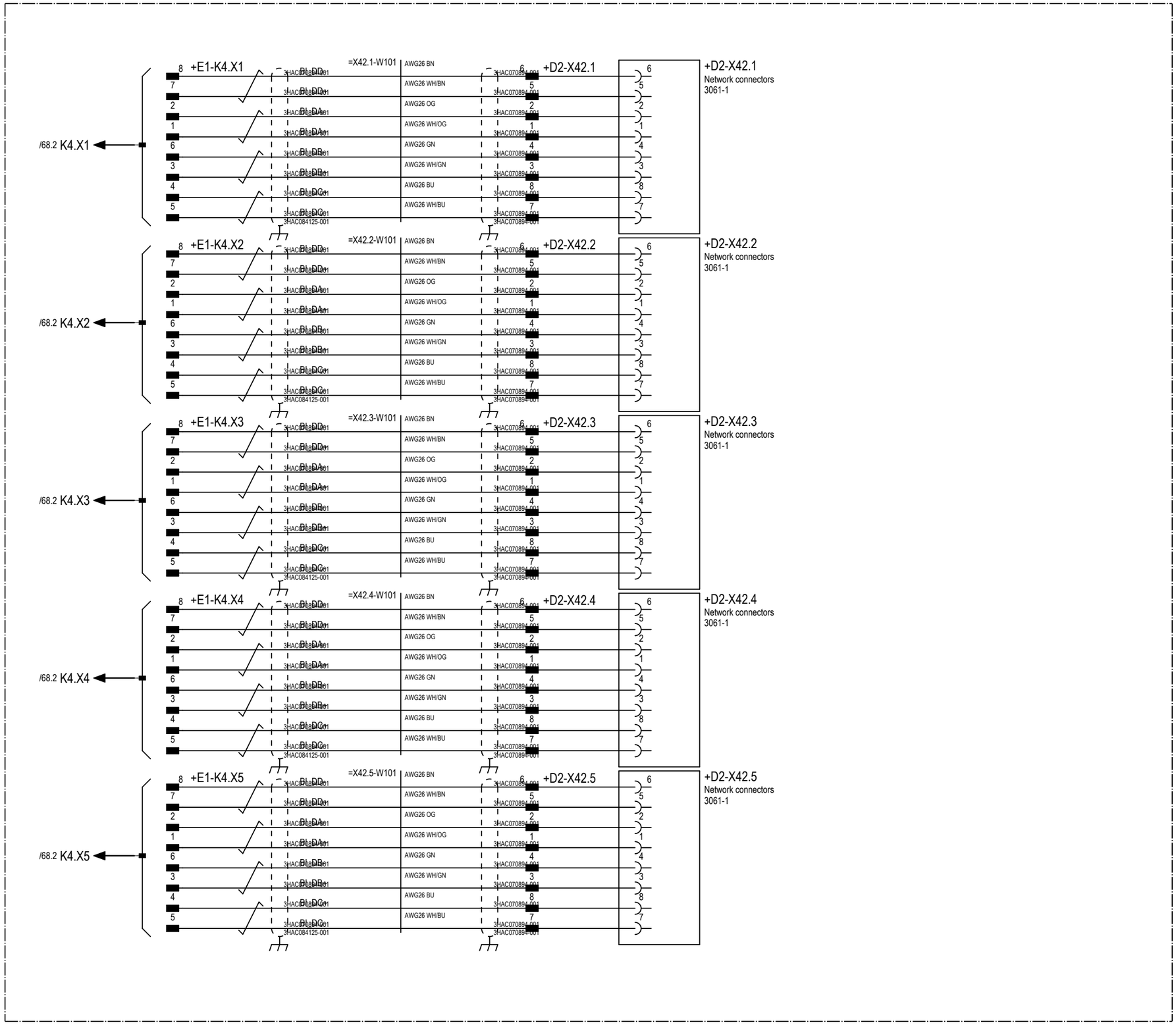

Latest revision: See revision text		Lab/Office: RA/RDP	OmniCore V400XT Network options	Status: APPROVED	Plant: = Location: + Sublocation: +
Prepared by, date: E. Mesaros	Approved by, date: M. Wadstein 2025-03-10			Document no. 3HAC082020-008	Rev. Ind 03

We reserve all rights in this document and in the information contained therein. Reproduction, use or disclosure to third parties without express authority is strictly forbidden. © Copyright ABB

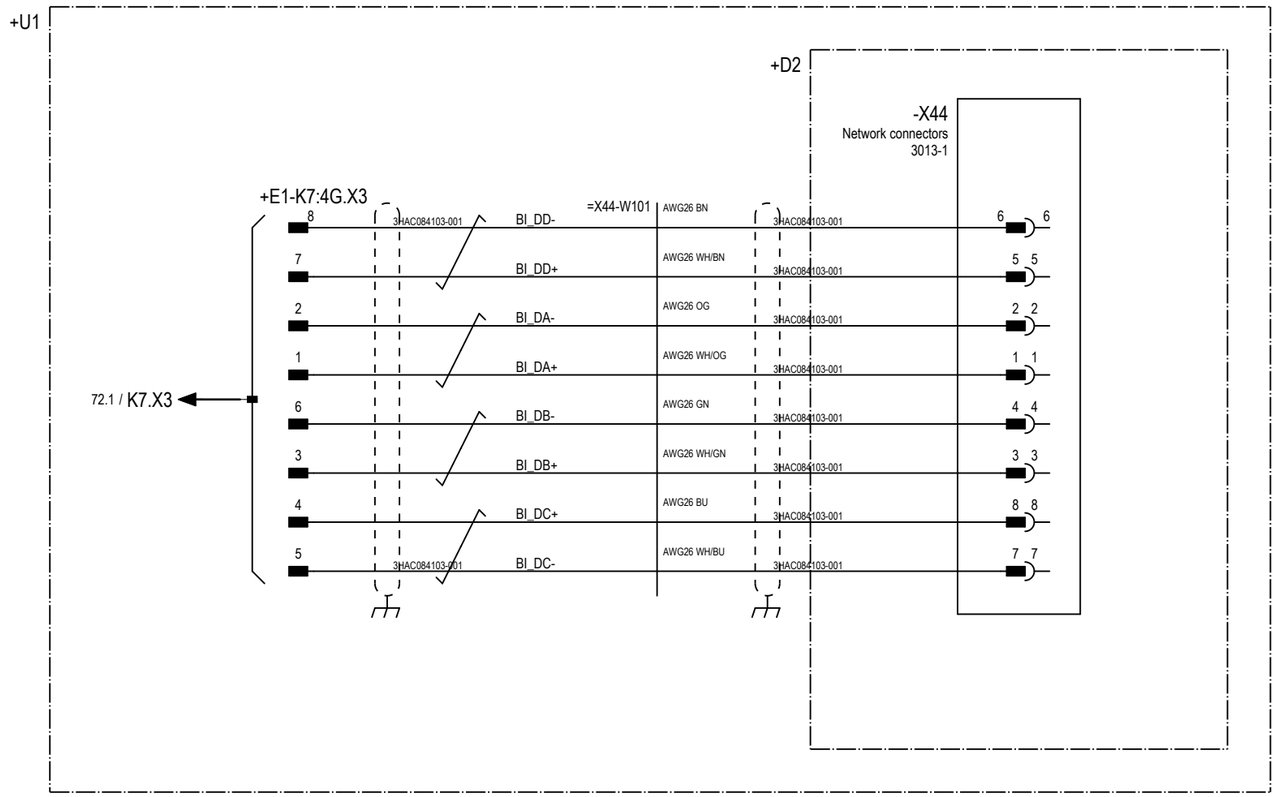

Latest revision: See revision text	ABB	Lab/Office: RA/RDP	OmniCore V400XT Network options	Status: APPROVED	Plant: = Location: + Sublocation: +
Prepared by, date: E. Mesaros	Approved by, date: M. Wadstein 2025-03-10			Document no. 3HAC082020-008	Rev. Ind 03

We reserve all rights in this document and in the information contained therein. Reproduction, use or disclosure to third parties without express authority is strictly forbidden. © Copyright ABB

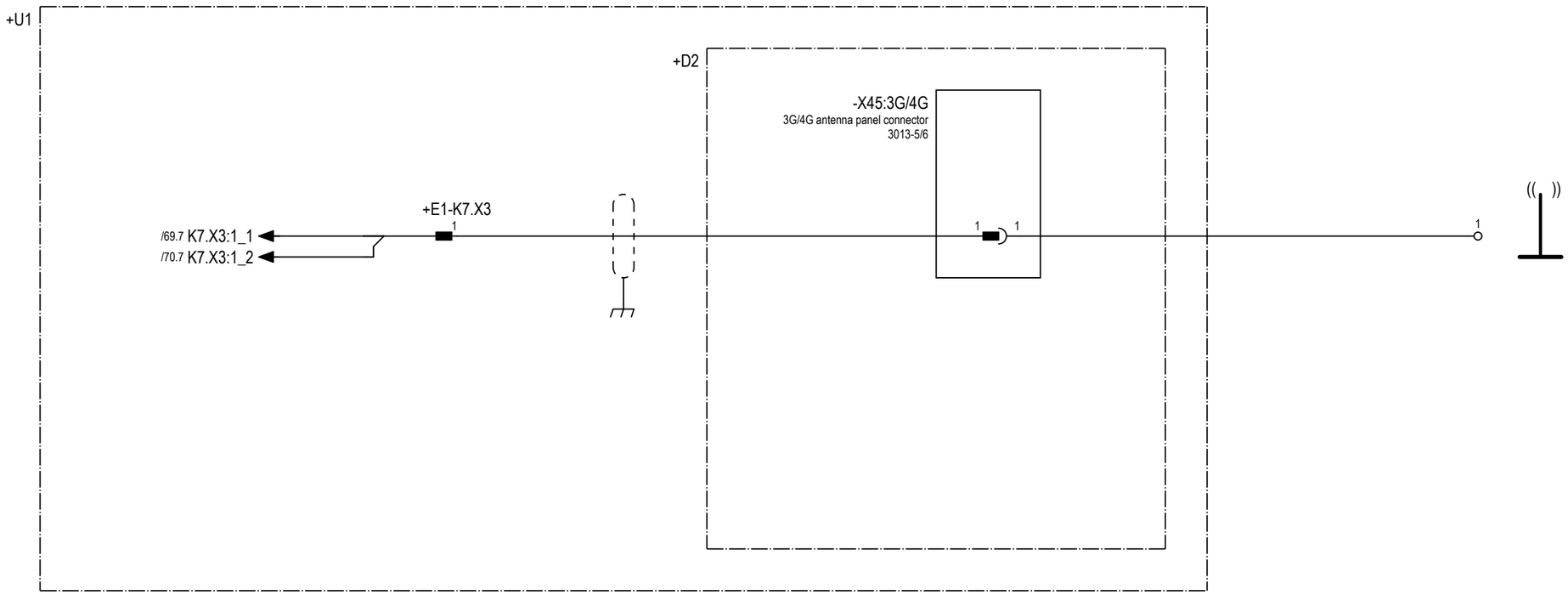

Latest revision: See revision text		Lab/Office: RA/RDP	OmniCore V400XT 3G/4G antenna panel connector	Status: APPROVED	Plant: = Location: + Sublocation: +	
Prepared by, date: E. Mesaros	Approved by, date: M. Wadstein 2025-03-10			Document no. 3HAC082020-008	Rev. Ind 03	Page 124 Next 125 Total 142

We reserve all rights in this document and in the information contained therein. Reproduction, use or disclosure to third parties without express authority is strictly forbidden. © Copyright ABB

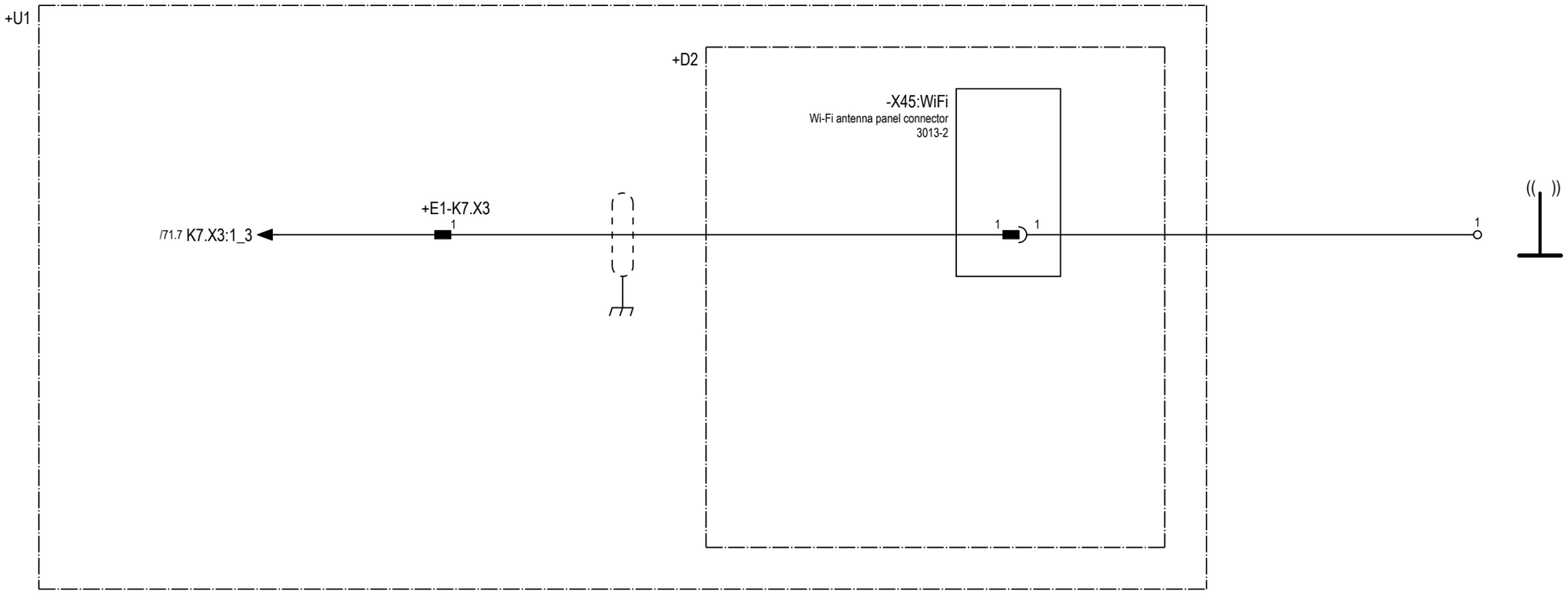

Latest revision: See revision text		Lab/Office: RA/RDP	OmniCore V400XT Wi-Fi antenna panel connector	Status: APPROVED	Plant: = Location: + Sublocation: +	
Prepared by, date: E. Mesaros	Approved by, date: M. Wadstein 2025-03-10			Document no. 3HAC082020-008	Rev. Ind 03	Page 125 Next 140 Total 142

We reserve all rights in this document and in the information contained therein. Reproduction, use or disclosure to third parties without express authority is strictly forbidden. © Copyright ABB

APPICATIONS

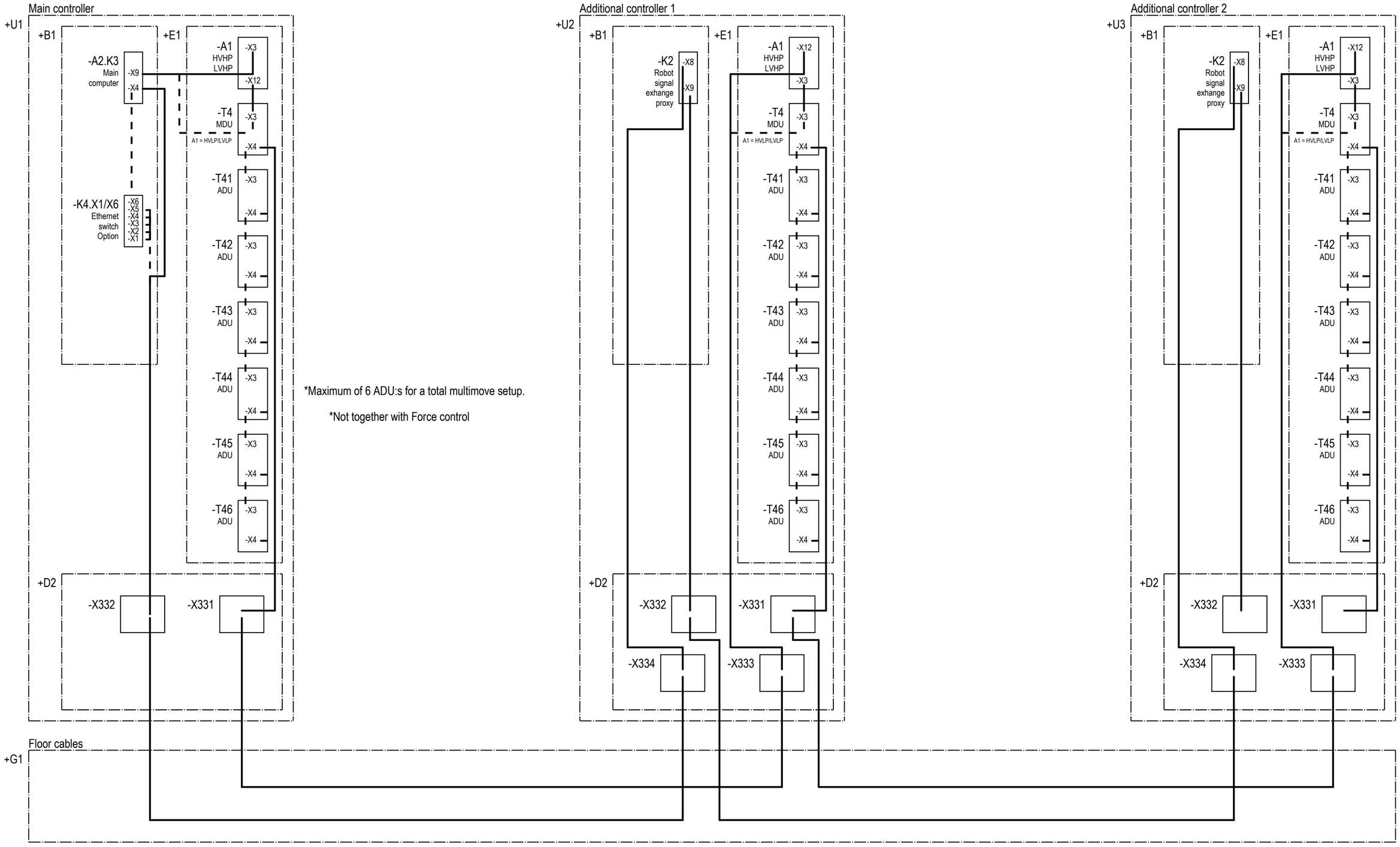

*Maximum of 6 ADU:s for a total multimove setup.

*Not together with Force control

We reserve all rights in this document and in the information contained therein. Reproduction, use or disclosure to third parties without express authority is strictly forbidden. © Copyright ABB

Latest revision: See revision text	ABB	Lab/Office: RA/RDP	OmniCore V400XT Multimove overview	Status: APPROVED	Plant: = Location: + Sublocation: +
Prepared by, date: E. Mesaros	Approved by, date: M. Wadstein 2025-03-10			Document no. 3HAC082020-008	Rev. Ind 03
					Page 141 Next 142 Total 142

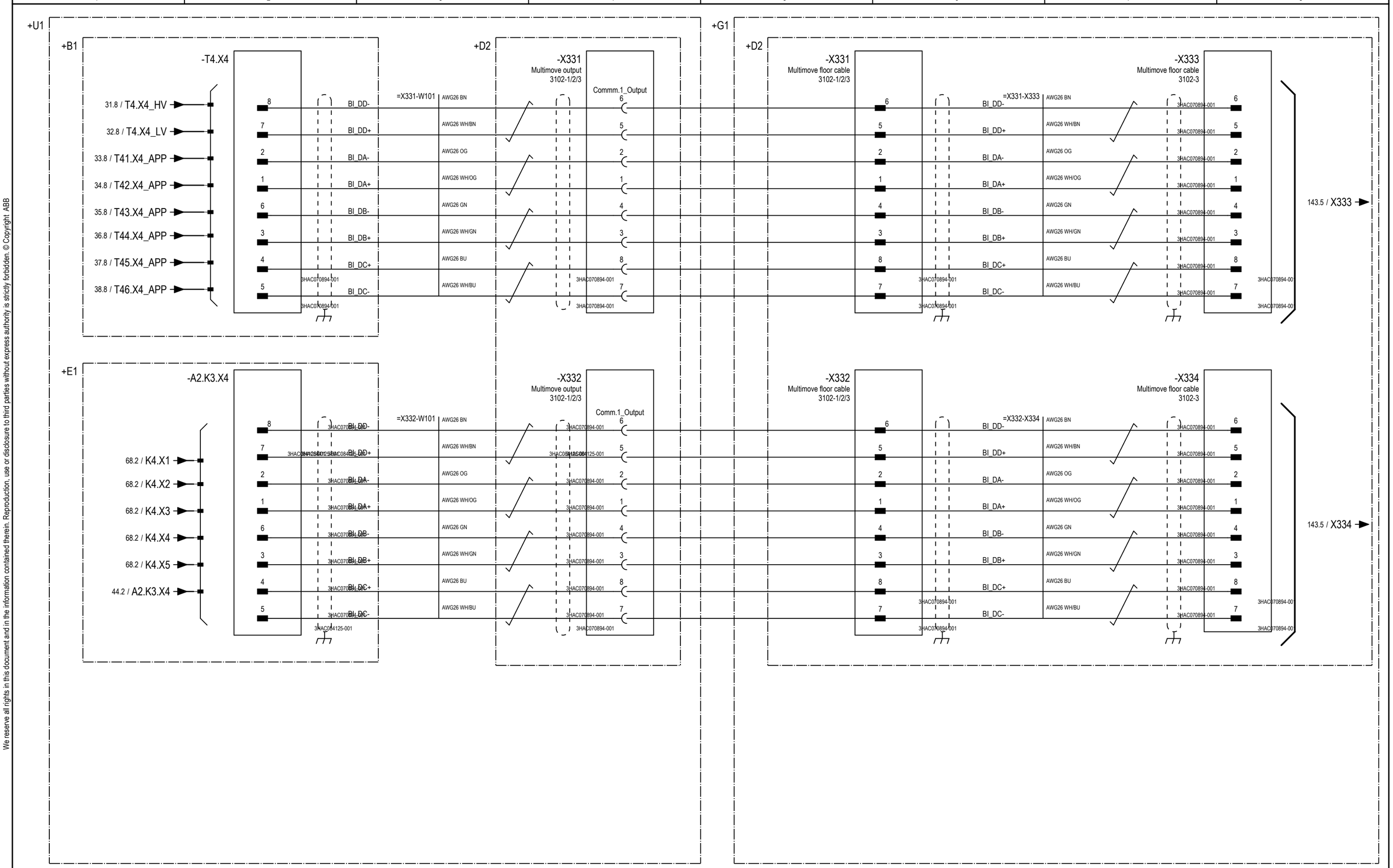

We reserve all rights in this document and in the information contained therein. Reproduction, use or disclosure to third parties without express authority is strictly forbidden. © Copyright ABB

Latest revision: See revision text		Lab/Office: RA/RDP	OmniCore V400XT MultiMove output, main controller	Status: APPROVED	Plant: = Location: + Sublocation: +
Prepared by, date: E. Mesaros	Approved by, date: M. Wadstein 2025-03-10			Document no. 3HAC082020-008	Rev. Ind 03
					Page 142 Next 143 Total 142

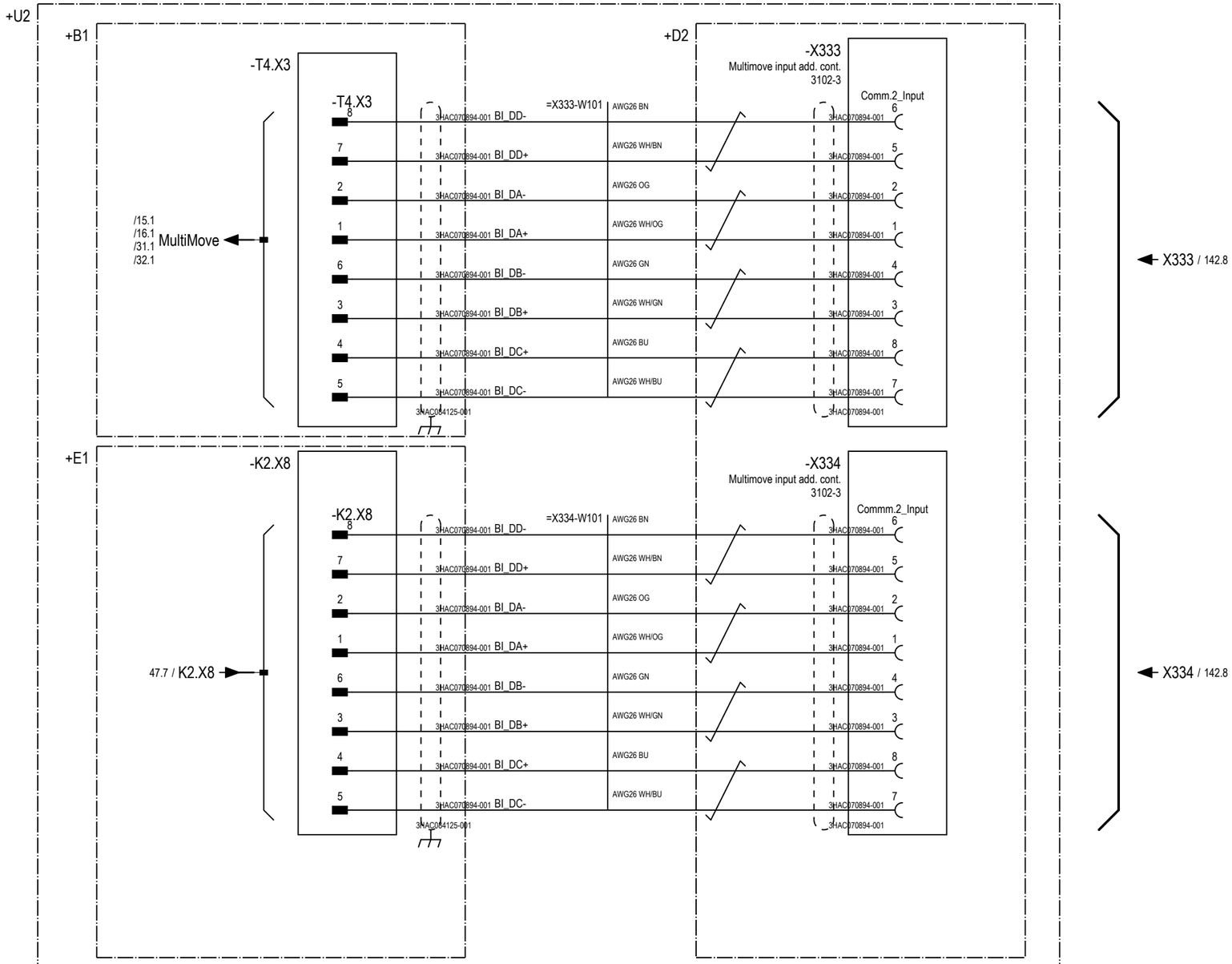

We reserve all rights in this document and in the information contained therein. Reproduction, use or disclosure to third parties without express authority is strictly forbidden. © Copyright ABB

Latest revision: See revision text		Lab/Office: RA/RDP	OmniCore V400XT MultiMove input, additional controller 1	Status: APPROVED	Plant: = Location: + Sublocation: +
Prepared by, date: E. Mesaros	Approved by, date: M. Wadstein 2025-03-10			Document no. 3HAC082020-008	Rev. Ind 03

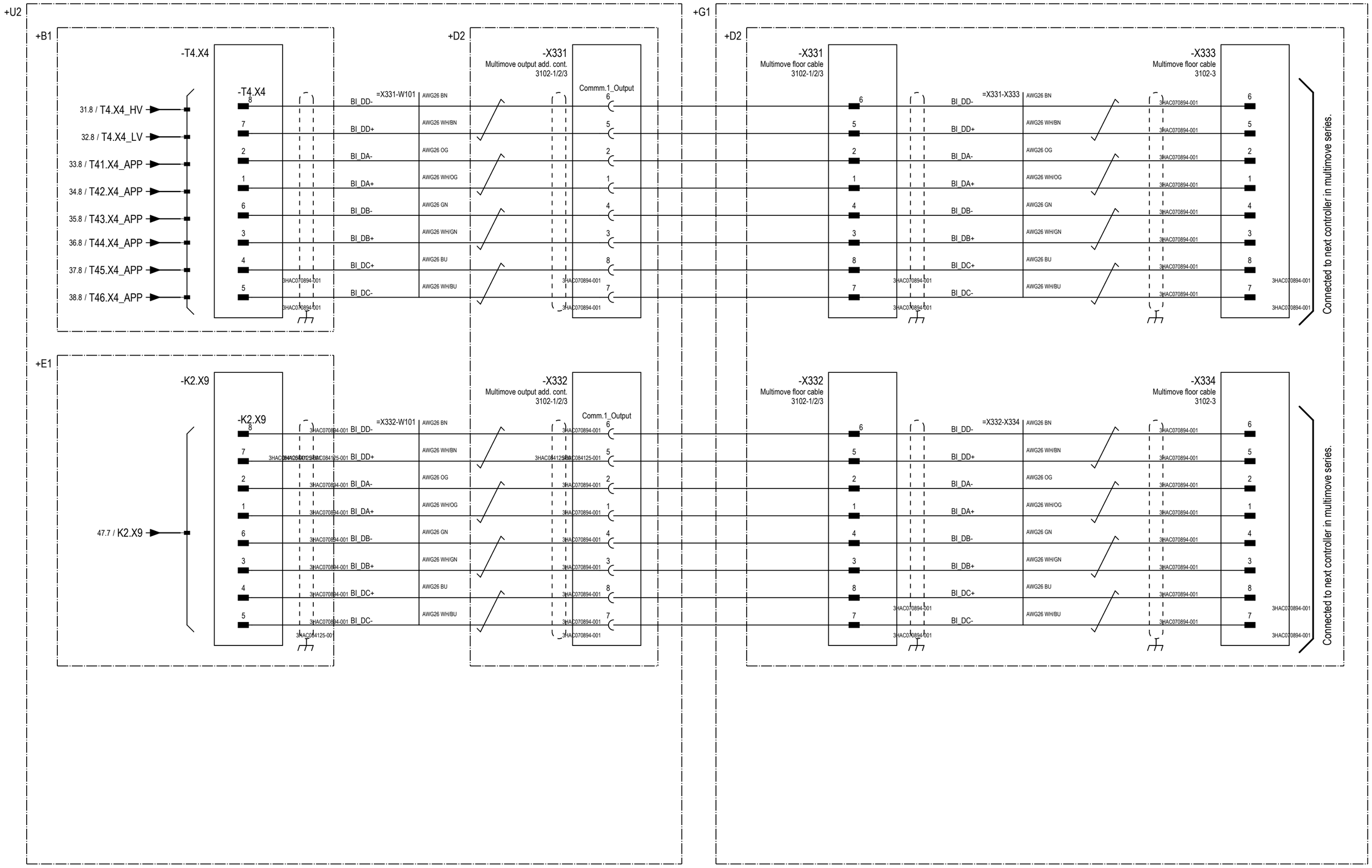

We reserve all rights in this document and in the information contained therein. Reproduction, use or disclosure to third parties without express authority is strictly forbidden. © Copyright ABB

Latest revision: See revision text		Lab/Office: RA/RDP	OmniCore V400XT MultiMove output, additional controller 2	Status: APPROVED	Plant: = Location: + Sublocation: +
Prepared by, date: E. Mesaros	Approved by, date: M. Wadstein 2025-03-10			Document no. 3HAC082020-008	Rev. Ind 03

Page	144
Next	145
Total	142

We reserve all rights in this document and in the information contained therein. Reproduction, use or disclosure to third parties without express authority is strictly forbidden. © Copyright ABB

+U1

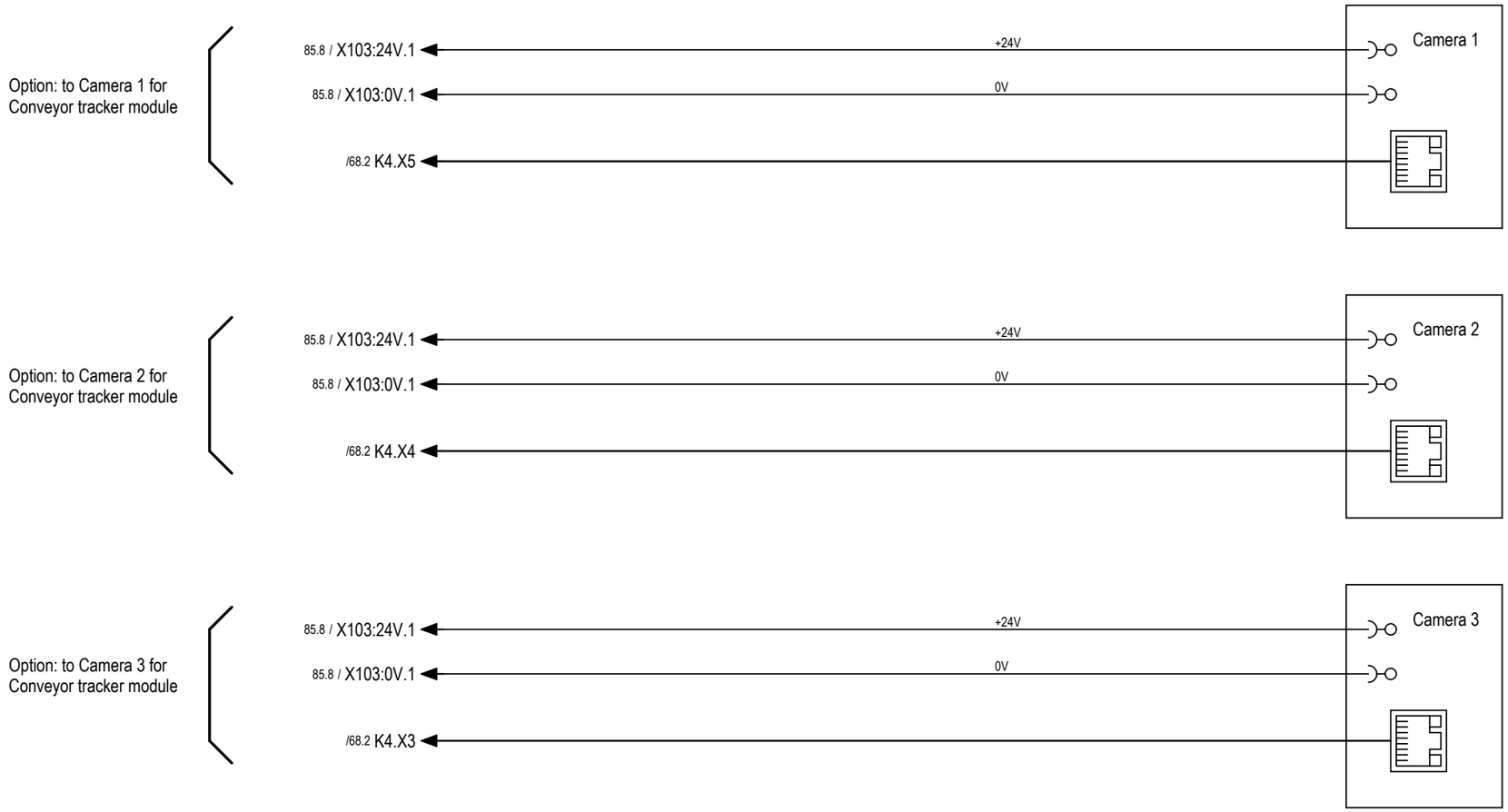

Latest revision: See revision text		Lab/Office: RA/RDP	OmniCore V400XT Vision, integrated cameras	Status: APPROVED	Plant: = Location: + Sublocation: +	
				Document no. 3HAC082020-008	Rev. Ind 03	Page 145 Next 146 Total 142
Prepared by, date: E. Mesaros	Approved by, date: M. Wadstein 2025-03-10					

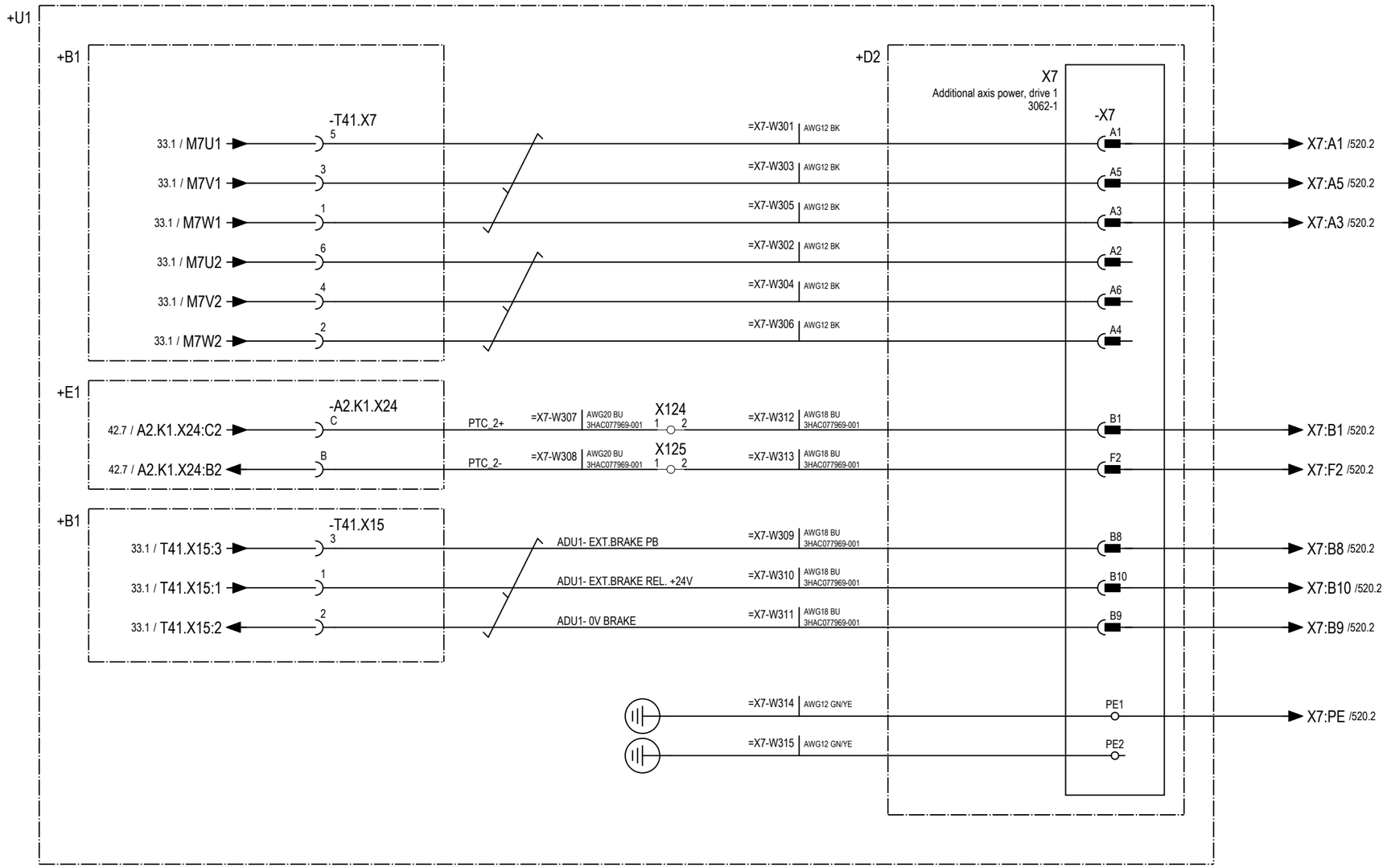

We reserve all rights in this document and in the information contained therein. Reproduction, use or disclosure to third parties without express authority is strictly forbidden. © Copyright ABB

Latest revision: See revision text		Lab/Office: RA/RDP	OmniCore V400XT Additional axis power, drive 1	Status: APPROVED	Plant: = Location: + Sublocation: +
Prepared by, date: E. Mesaros	Approved by, date: M. Wadstein 2025-03-10			Document no. 3HAC082020-008	Rev. Ind 03

Page	146
Next	147
Total	142

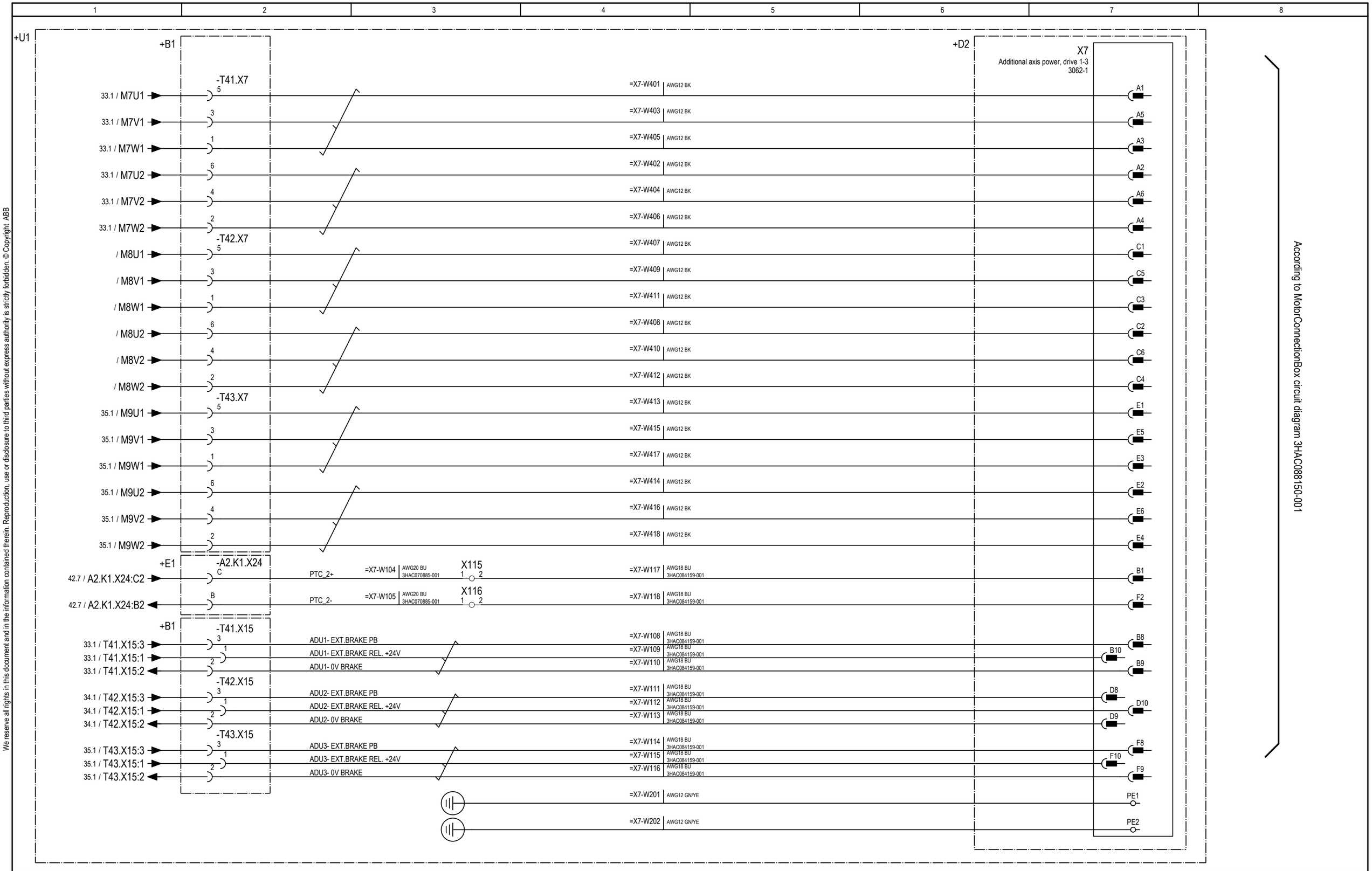

According to MotorConnectionBox circuit diagram 3HAC088150-001

We reserve all rights in this document and in the information contained therein. Reproduction, use or disclosure to third parties without express authority is strictly forbidden. © Copyright ABB

Latest revision: See revision text		Lab/Office: RA/RDP	OmniCore V400XT Additional axis power, drive 1-3	Status: APPROVED	Plant: = Location: + Sublocation: +
Prepared by, date: E. Mesaros	Approved by, date: M. Wadstein 2025-03-10			Document no. 3HAC082020-008	Rev. Ind 03
					Page 147 Next 148 Total 142

We reserve all rights in this document and in the information contained therein. Reproduction, use or disclosure to third parties without express authority is strictly forbidden. © Copyright ABB

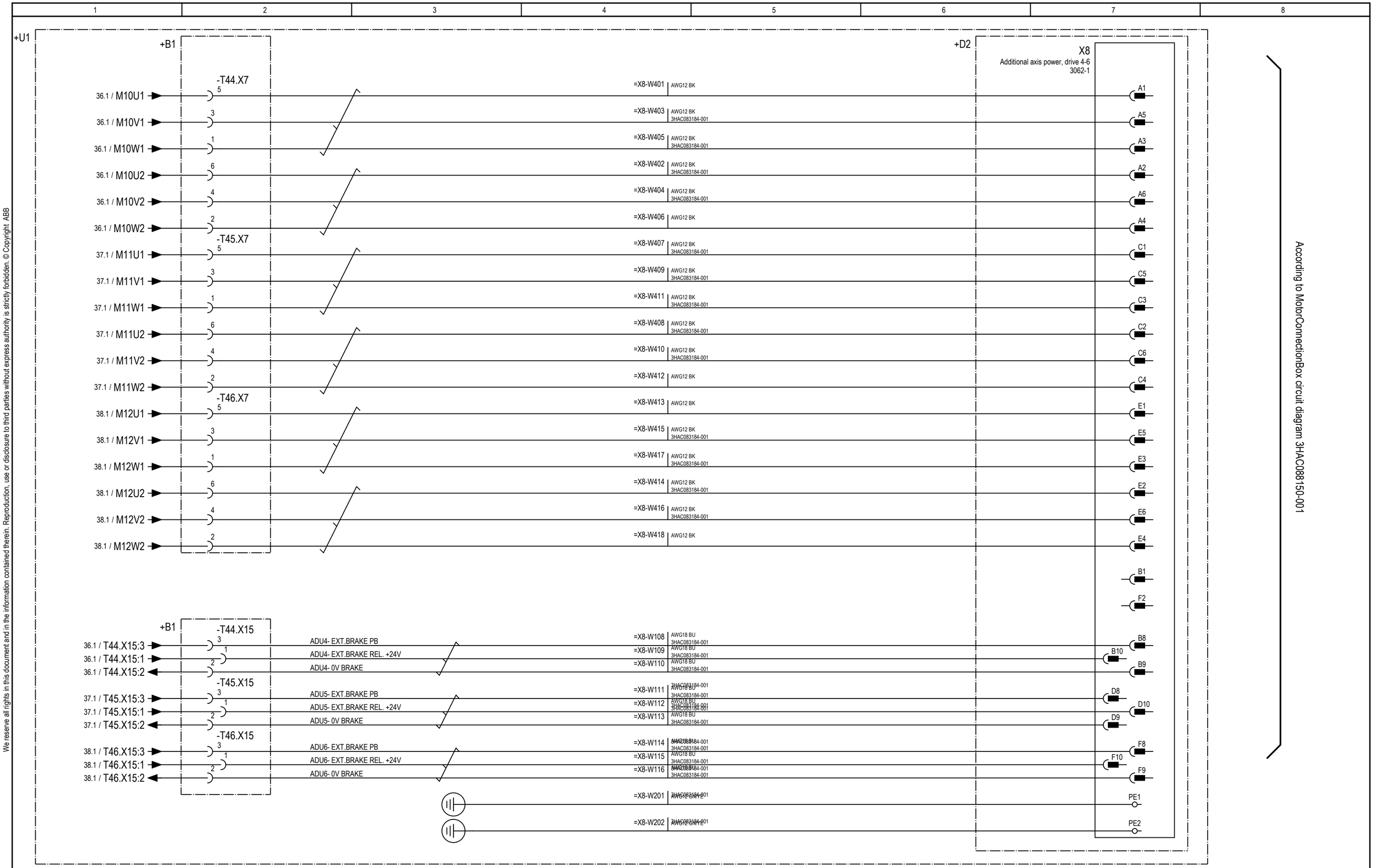

According to MotorConnectionBox circuit diagram 3HAC088150-001

Latest revision: See revision text		Lab/Office: RA/RDP	OmniCore V400XT Additional axis power, drive 4-6	Status: APPROVED	Plant: = Location: + Sublocation: +
Prepared by, date: E. Mesaros	Approved by, date: M. Wadstein 2025-03-10			Document no. 3HAC082020-008	Rev. Ind 03

Page	148
Next	149
Total	142

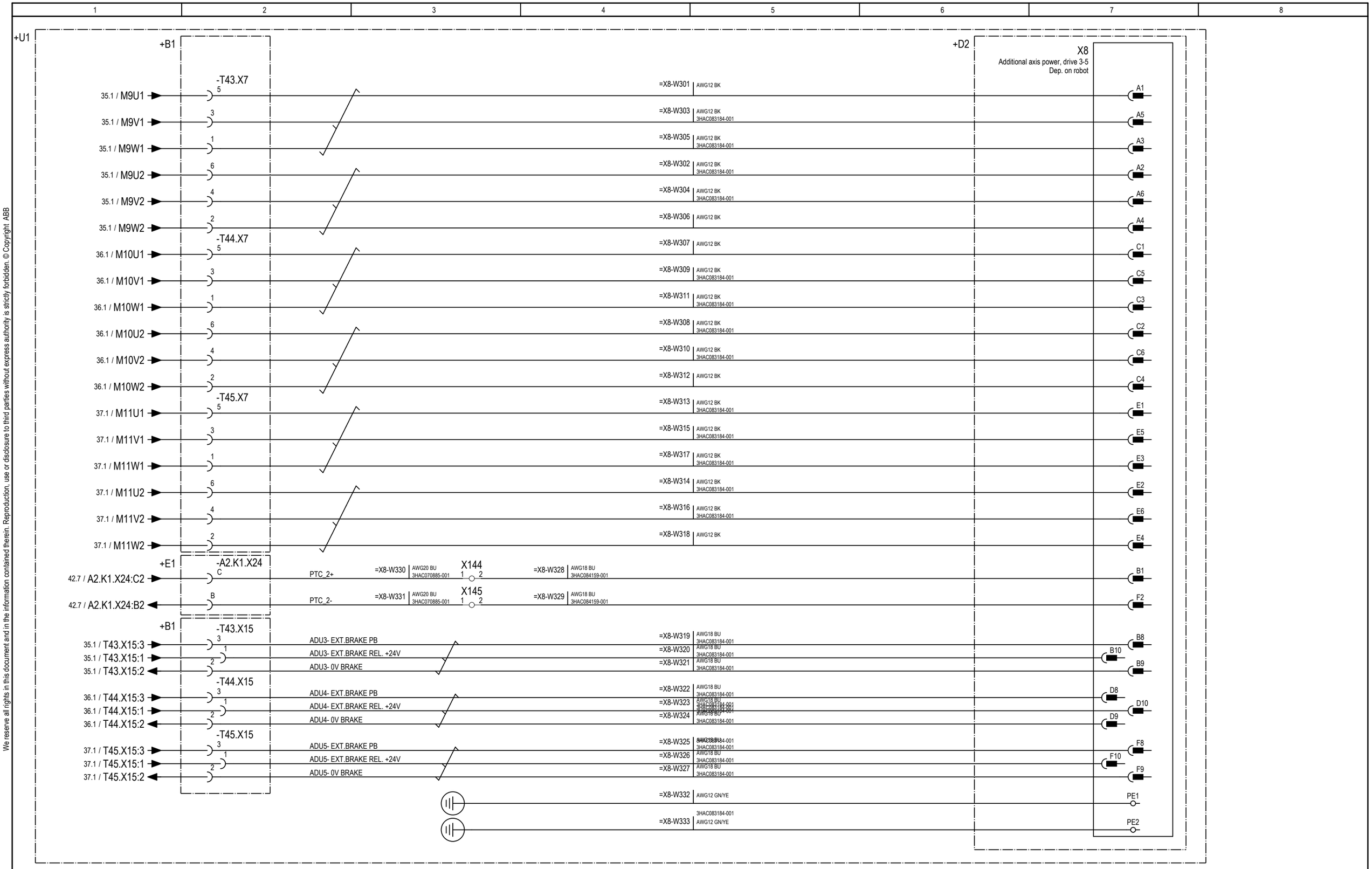

We reserve all rights in this document and in the information contained therein. Reproduction, use or disclosure to third parties without express authority is strictly forbidden. © Copyright ABB

Latest revision: See revision text		Lab/Office: RA/RDP	OmniCore V400XT Additional axis power, drive 3-5	Status: APPROVED	Plant: =	
					Location: +	
					Sublocation: +	
Prepared by, date: E. Mesaros	Approved by, date: M. Wadstein 2025-03-10			Document no. 3HAC082020-008	Rev. Ind 03	Page 149
						Next 150
						Total 142

We reserve all rights in this document and in the information contained therein. Reproduction, use or disclosure to third parties without express authority is strictly forbidden. © Copyright ABB

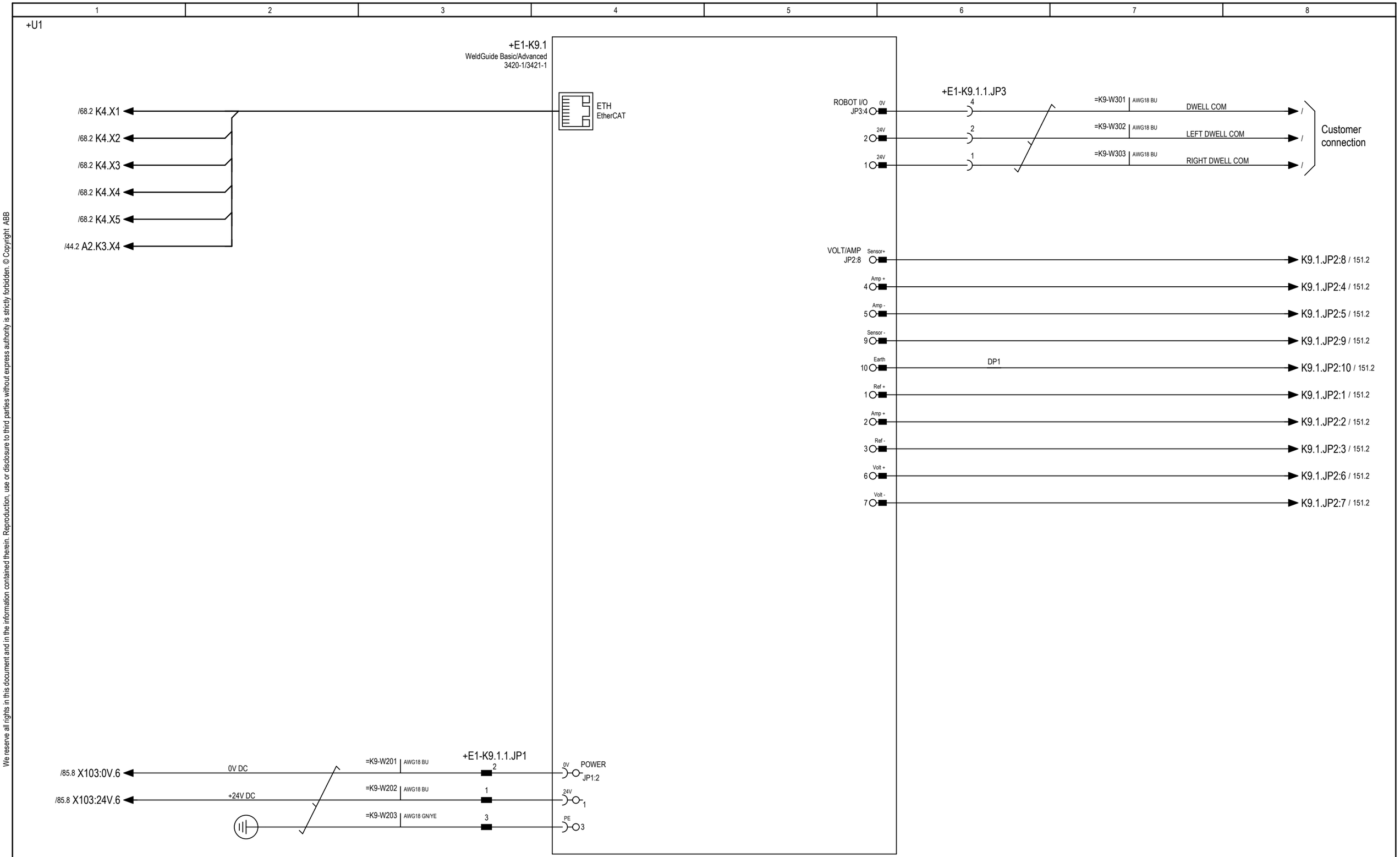

Latest revision: See revision text		Lab/Office: RA/RDP	OmniCore V400XT WeldGuide Basic/Advanced	Status: APPROVED	Plant: = Location: + Sublocation: +
Prepared by, date: E. Mesaros	Approved by, date: M. Wadstein 2025-03-10			Document no. 3HAC082020-008	Rev. Ind 03

Page	150
Next	151
Total	142

We reserve all rights in this document and in the information contained therein. Reproduction, use or disclosure to third parties without express authority is strictly forbidden. © Copyright ABB

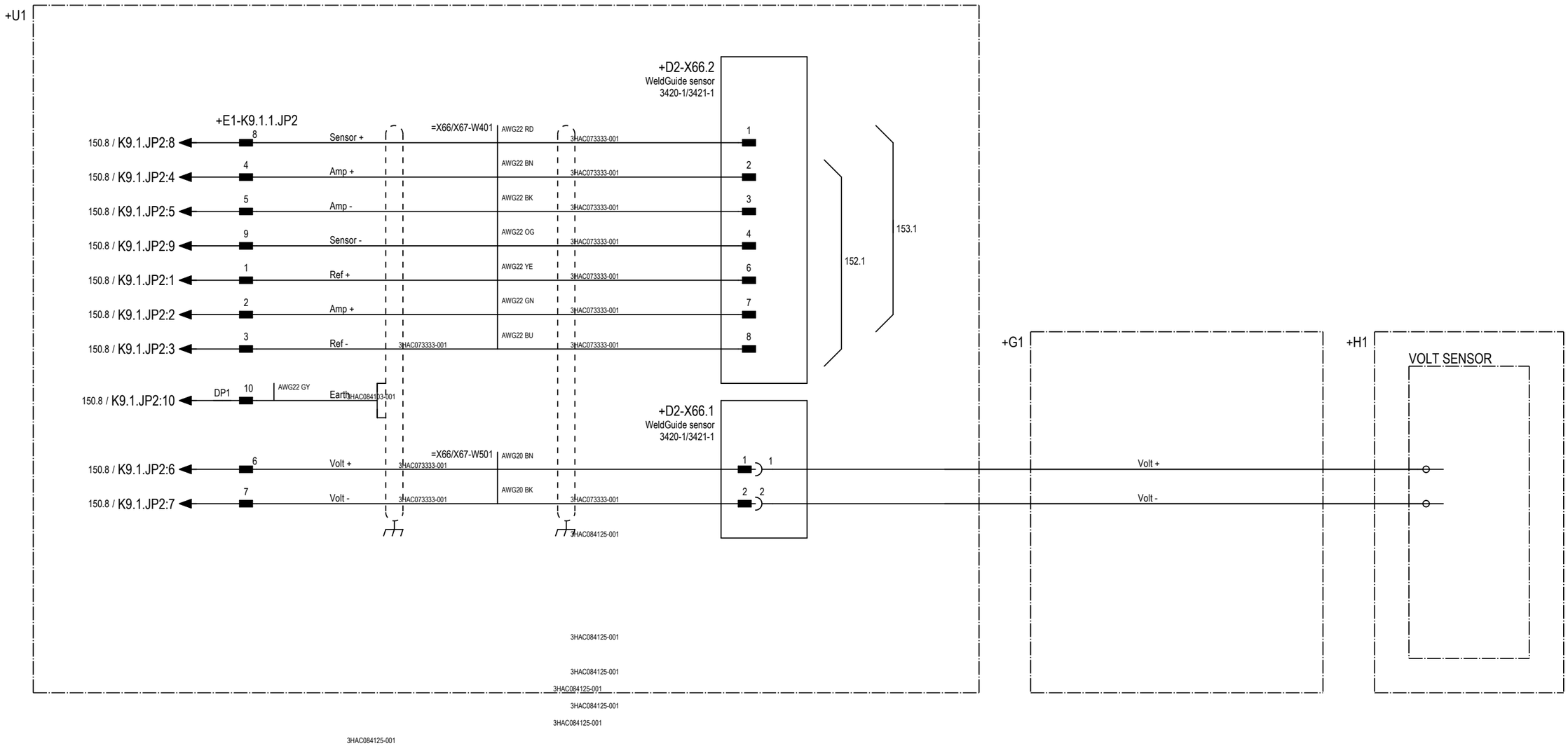

Latest revision: See revision text		Lab/Office: RA/RDP	OmniCore V400XT WeldGuide sensor	Status: APPROVED	Plant: = Location: + Sublocation: +
Prepared by, date: E. Mesaros	Approved by, date: M. Wadstein 2025-03-10			Document no. 3HAC082020-008	Rev. Ind 03

Page	151
Next	152
Total	142

We reserve all rights in this document and in the information contained therein. Reproduction, use or disclosure to third parties without express authority is strictly forbidden. © Copyright ABB

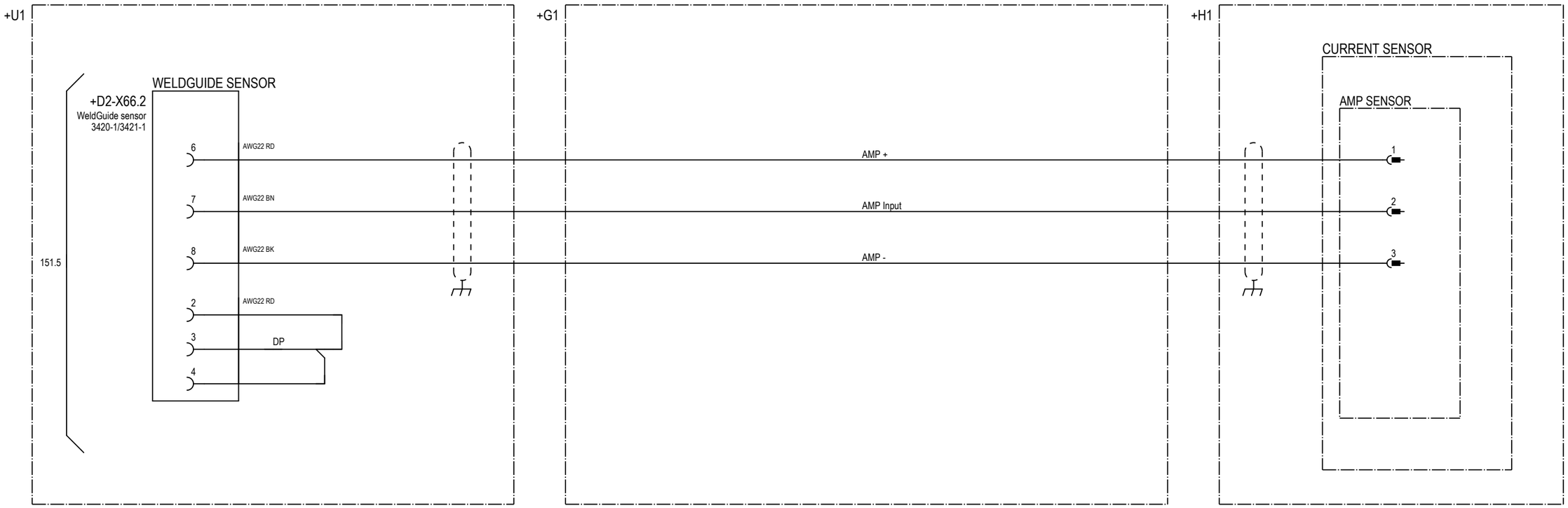

Latest revision: See revision text		ABB	Lab/Office: RA/RDP	OmniCore V400XT WeldGuide AMP sensor solid core	Status: APPROVED	Plant: = Location: + Sublocation: +
Prepared by, date: E. Mesaros	Approved by, date: M. Wadstein 2025-03-10				Document no. 3HAC082020-008	Rev. Ind 03
						Page 152 Next 153 Total 142

We reserve all rights in this document and in the information contained therein. Reproduction, use or disclosure to third parties without express authority is strictly forbidden. © Copyright ABB

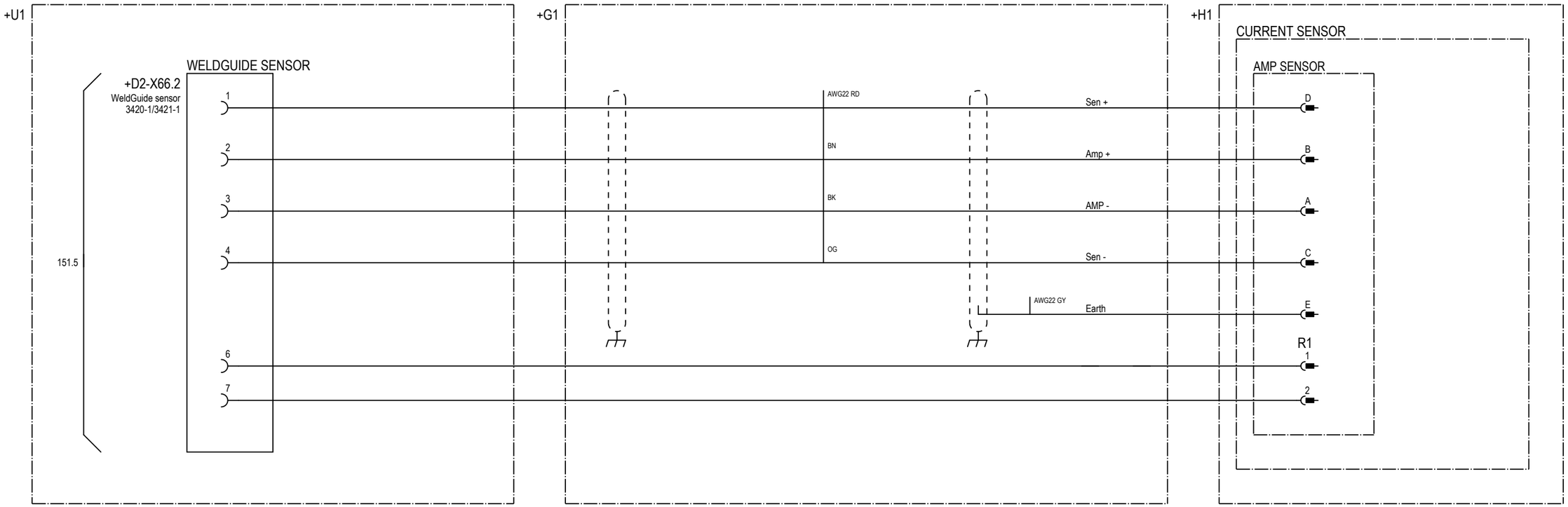

Latest revision: See revision text		ABB	Lab/Office: RA/RDP	OmniCore V400XT WeldGuide AMP sensor split core	Status: APPROVED	Plant: = Location: + Sublocation: +
Prepared by, date: E. Mesaros	Approved by, date: M. Wadstein 2025-03-10				Document no. 3HAC082020-008	Rev. Ind 03
						Page 153 Next 154 Total 142

We reserve all rights in this document and in the information contained therein. Reproduction, use or disclosure to third parties without express authority is strictly forbidden. © Copyright ABB

+U1

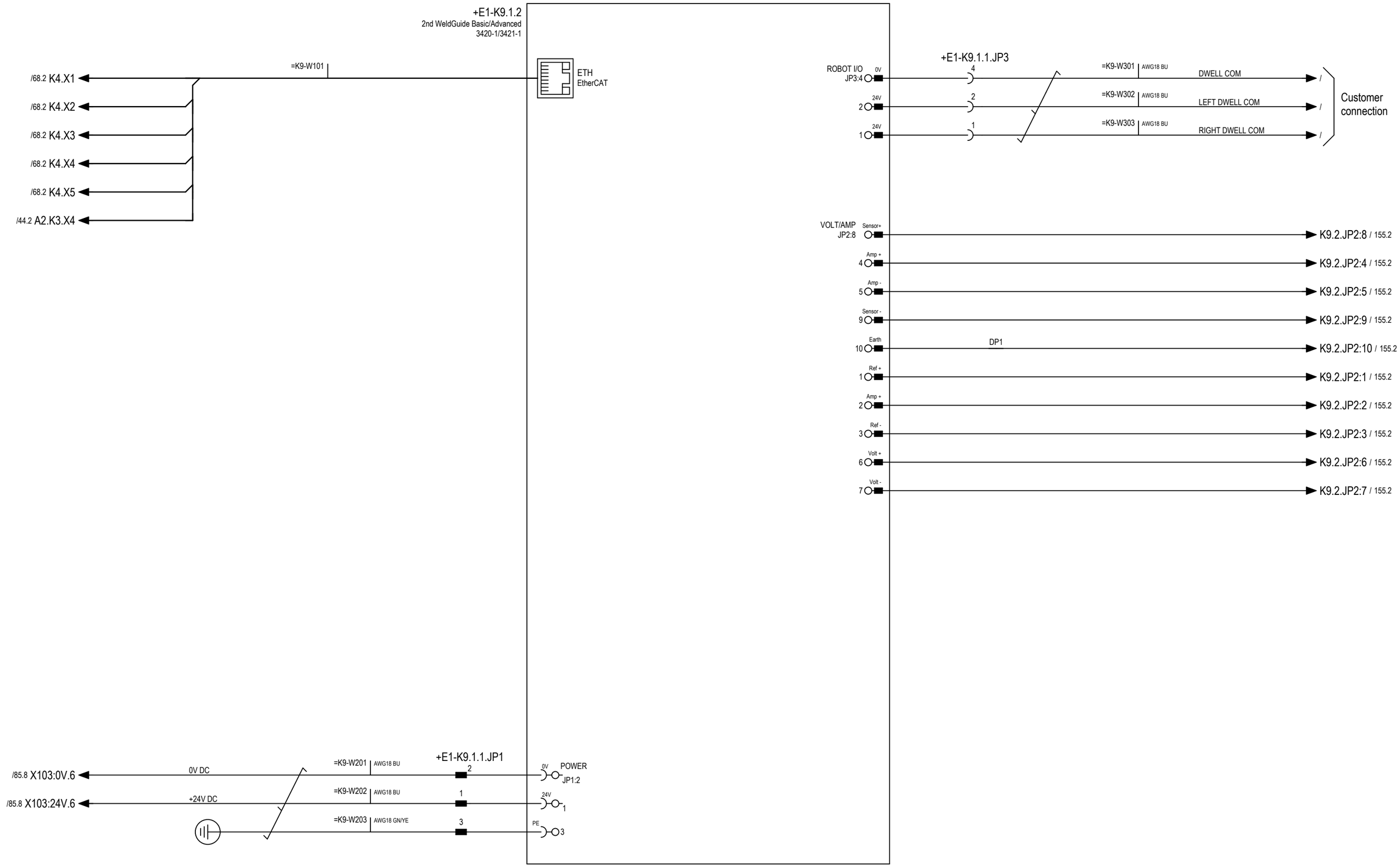

Latest revision: See revision text		Lab/Office: RA/RDP	OmniCore V400XT WeldGuide Basic/Advanced 2nd	Status: APPROVED	Plant: = Location: + Sublocation: +
Prepared by, date: E. Mesaros	Approved by, date: M. Wadstein 2025-03-10			Document no. 3HAC082020-008	Rev. Ind 03

Page 154 Next 155 Total 142

We reserve all rights in this document and in the information contained therein. Reproduction, use or disclosure to third parties without express authority is strictly forbidden. © Copyright ABB

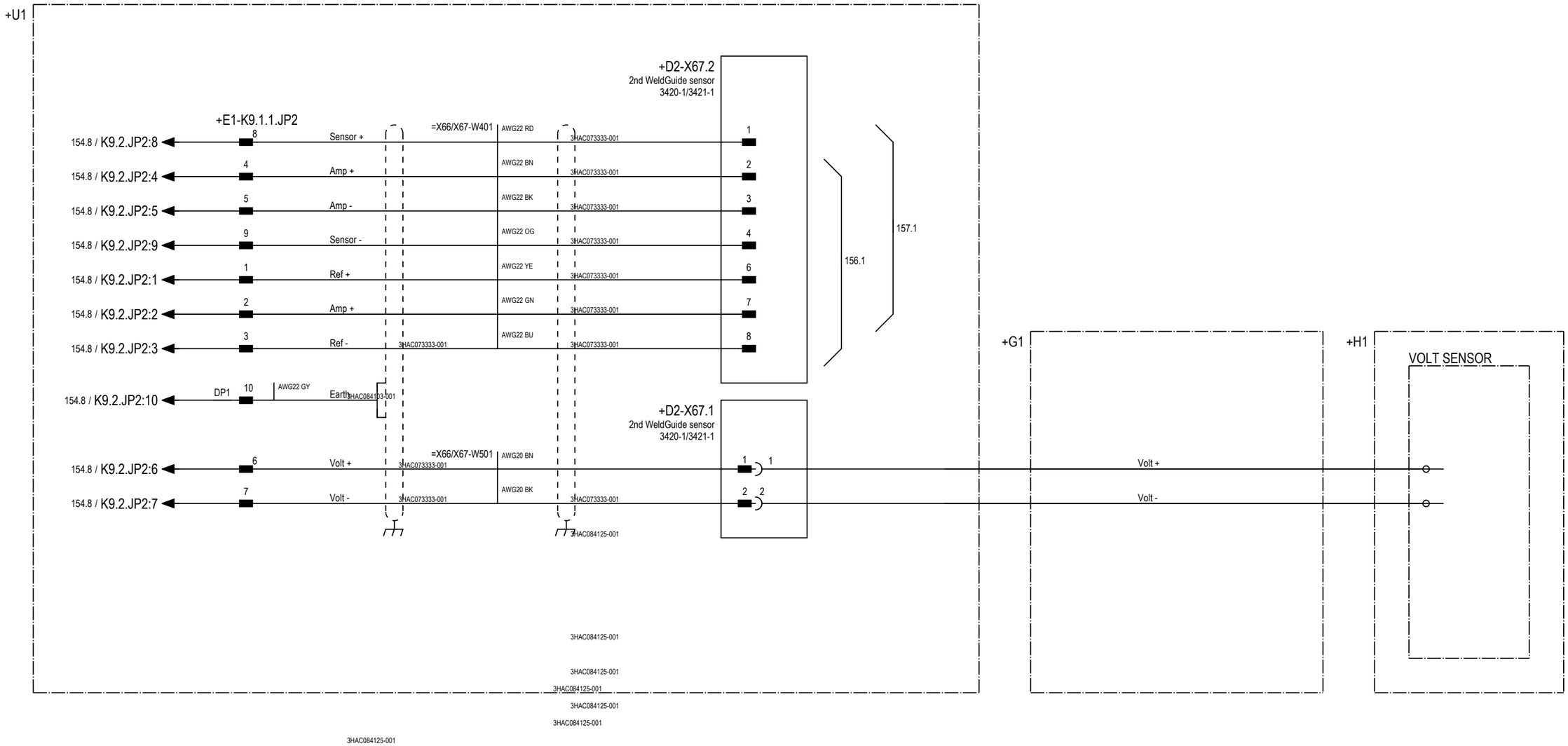

Latest revision: See revision text		ABB	Lab/Office: RA/RDP	OmniCore V400XT WeldGuide sensor, 2nd	Status: APPROVED	Plant: = Location: + Sublocation: +
Prepared by, date: E. Mesaros	Approved by, date: M. Wadstein 2025-03-10				Document no. 3HAC082020-008	Rev. Ind 03

We reserve all rights in this document and in the information contained therein. Reproduction, use or disclosure to third parties without express authority is strictly forbidden. © Copyright ABB

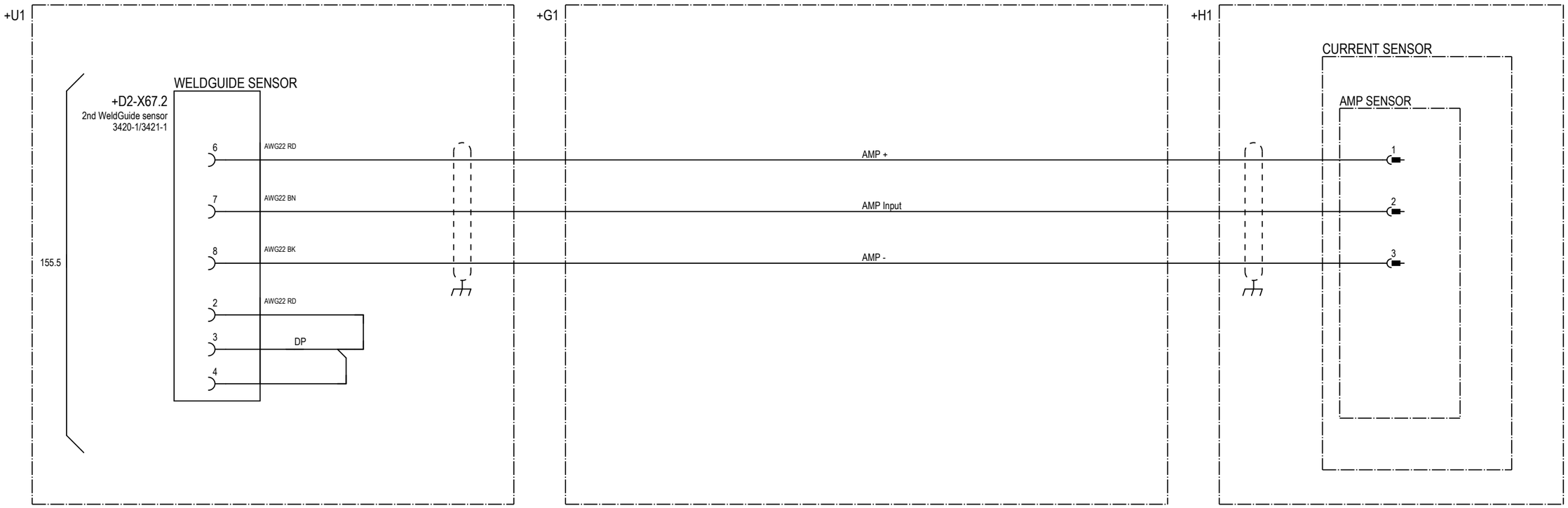

Latest revision: See revision text	ABB	Lab/Office: RA/RDP	OmniCore V400XT WeldGuide AMP sensor solid core, 2nd	Status: APPROVED	Plant: = Location: + Sublocation: +
Prepared by, date: E. Mesaros	Approved by, date: M. Wadstein 2025-03-10			Document no. 3HAC082020-008	Rev. Ind 03
					Page 156 Next 157 Total 142

We reserve all rights in this document and in the information contained therein. Reproduction, use or disclosure to third parties without express authority is strictly forbidden. © Copyright ABB

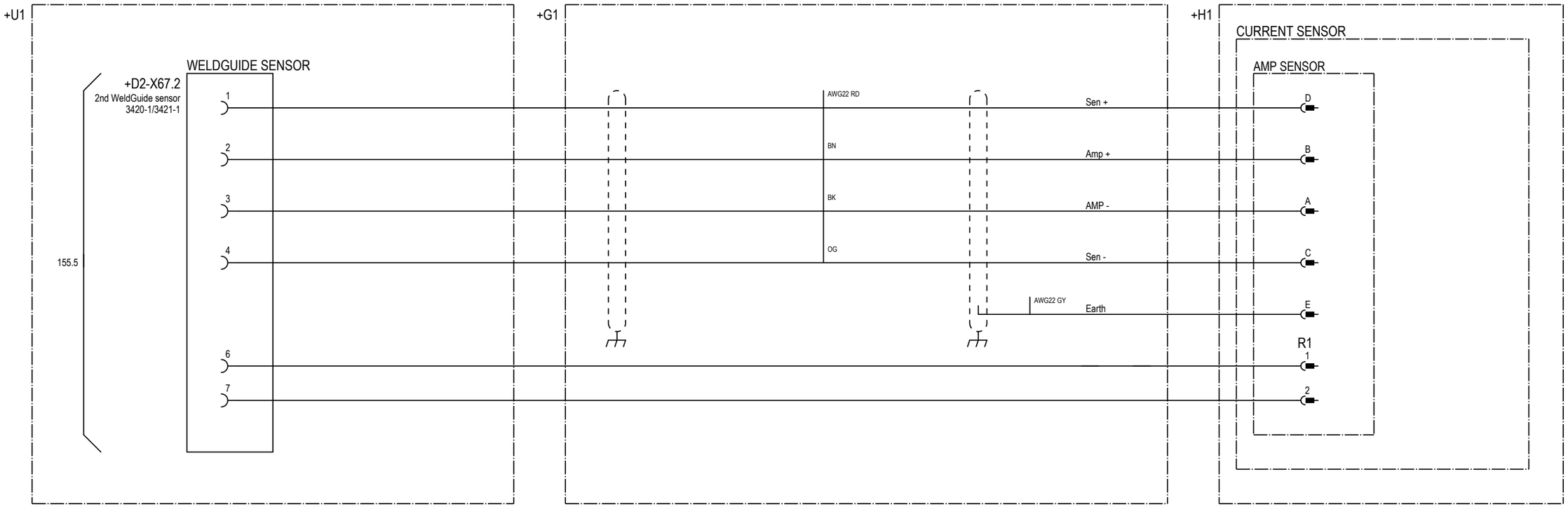

Latest revision: See revision text		ABB	Lab/Office: RA/RDP	OmniCore V400XT WeldGuide AMP sensor split core 2nd	Status: APPROVED	Plant: = Location: + Sublocation: +
Prepared by, date: E. Mesaros	Approved by, date: M. Wadstein 2025-03-10				Document no. 3HAC082020-008	Rev. Ind 03
						Page 157 Next 158 Total 142

We reserve all rights in this document and in the information contained therein. Reproduction, use or disclosure to third parties without express authority is strictly forbidden. © Copyright ABB

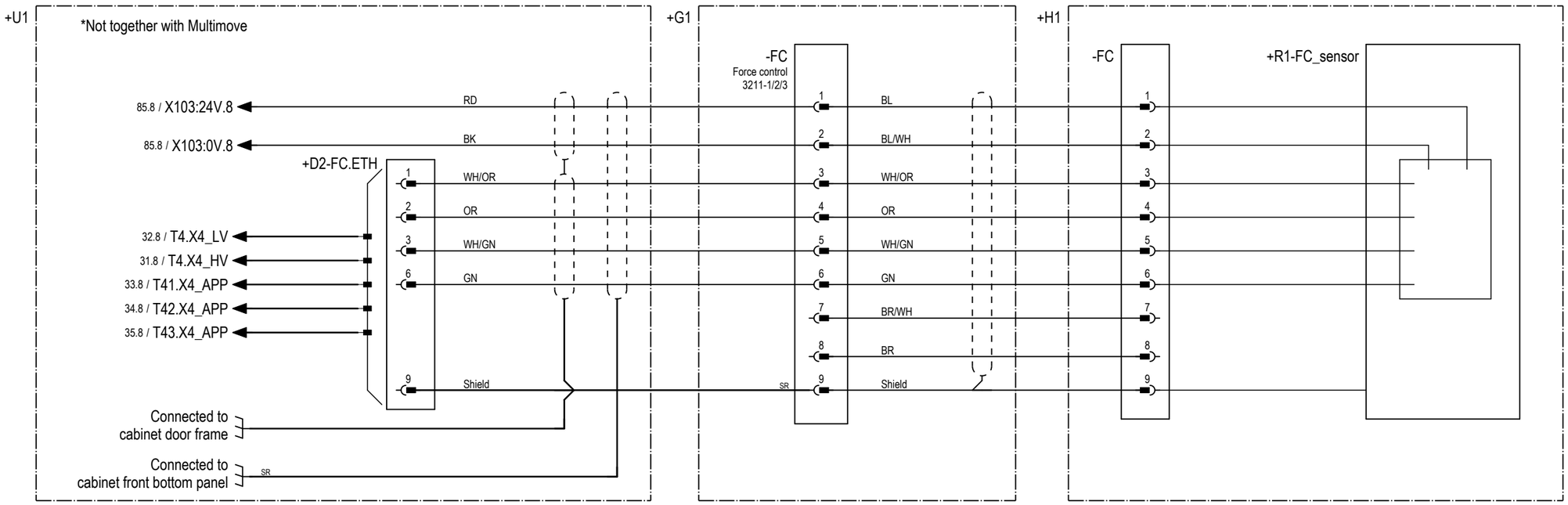

Latest revision: See revision text		ABB	Lab/Office: RA/RDP	OmniCore V400XT Force control	Status: APPROVED	Plant: = Location: + Sublocation: +
Prepared by, date: E. Mesaros	Approved by, date: M. Wadstein 2025-03-10				Document no. 3HAC082020-008	Rev. Ind 03
						Page 158 Next 159 Total 142

We reserve all rights in this document and in the information contained therein. Reproduction, use or disclosure to third parties without express authority is strictly forbidden. © Copyright ABB

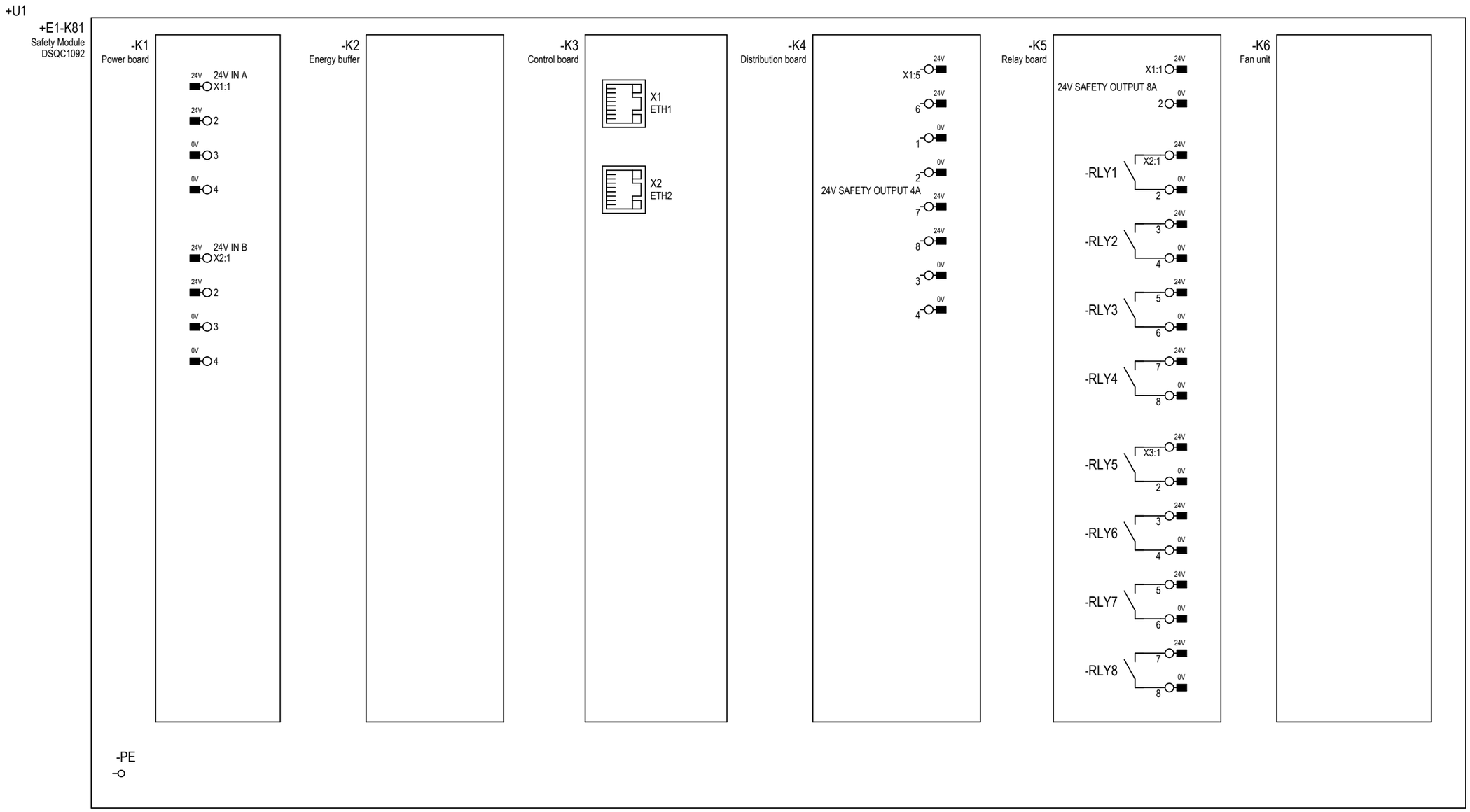

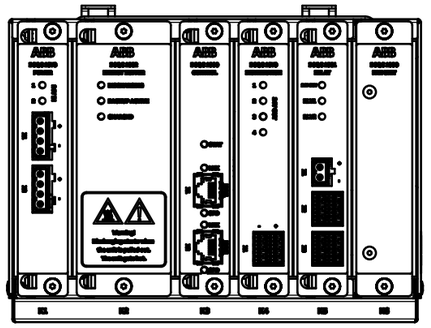

Latest revision: See revision text		Lab/Office: RA/RDP	OmniCore V400XT Safety Module overview	Status: APPROVED	Plant: = Location: + Sublocation: +
Prepared by, date: E. Mesaros	Approved by, date: M. Wadstein 2025-03-10			Document no. 3HAC082020-008	Rev. Ind 03

We reserve all rights in this document and in the information contained therein. Reproduction, use or disclosure to third parties without express authority is strictly forbidden. © Copyright ABB

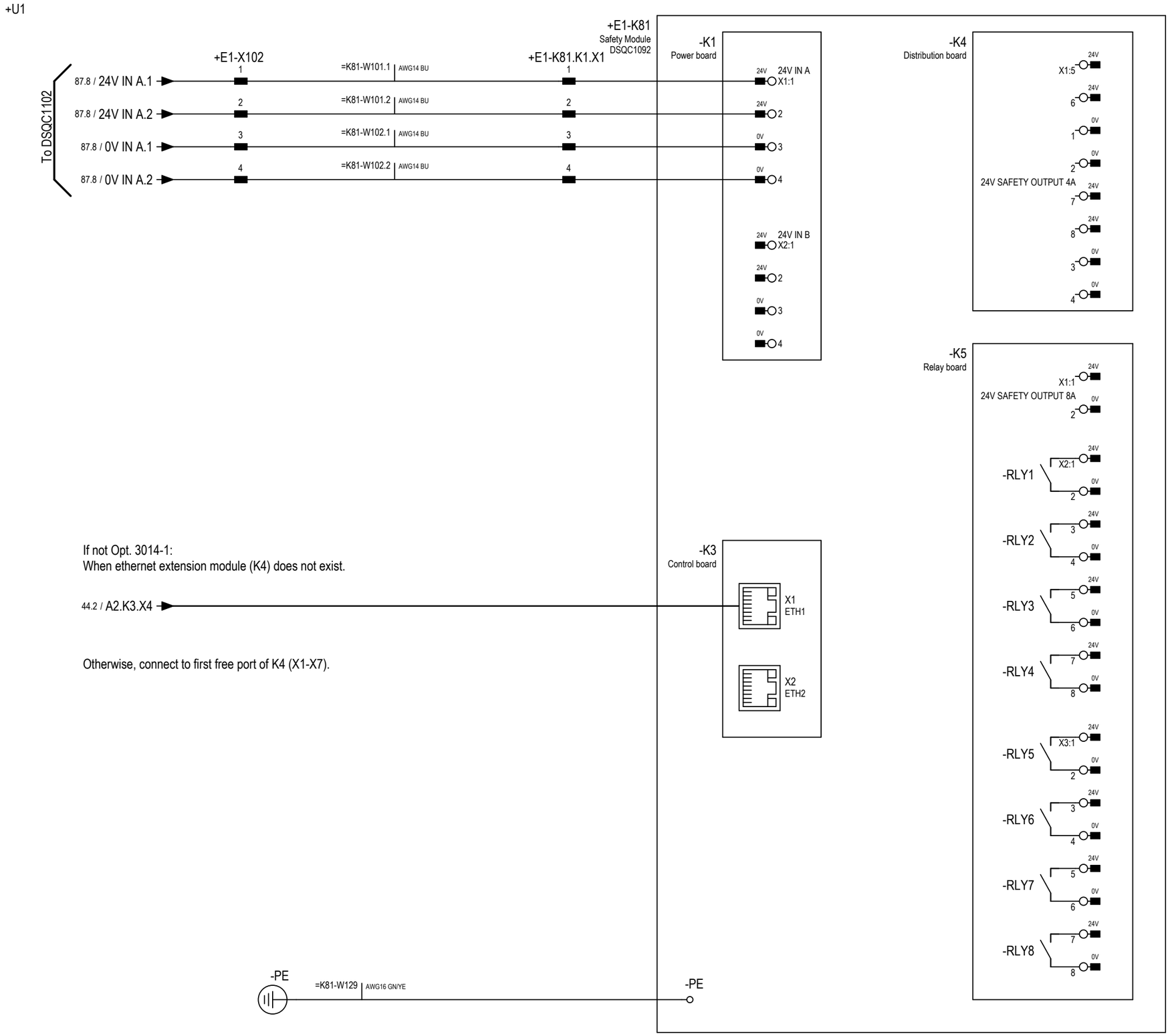

Latest revision: See revision text		Lab/Office: RA/RDP	OmniCore V400XT Safety Module	Status: APPROVED	Plant: = Location: + Sublocation: +
Prepared by, date: E. Mesaros	Approved by, date: M. Wadstein 2025-03-10			Document no. 3HAC082020-008	Rev. Ind 03

Page 160 | Next 500 | Total 142

We reserve all rights in this document and in the information contained therein. Reproduction, use or disclosure to third parties without express authority is strictly forbidden. © Copyright ABB

- IRB 390 /501.7 /502.6 /503.6
- IRB 460 /503.6 /504.7 /505.7 /506.7 /507.7 /508.6 /520.7
- IRB 660 /503.6 /504.7 /505.7 /506.7 /507.7 /508.6 /509.6 /520.7
- IRB 1300 /510.7 /511.6 /512.6
- IRB 1600 /109.5 /503.6 /513.7 /514.6 /515.7
- IRB 2400 /104.5 /509.6 /513.7 /514.6 /515.7
- IRB 2600 /503.6 /504.7 /505.7 /506.7 /507.7 /508.6 /520.7
- IRB 4600 /503.6 /504.7 /505.7 /506.7 /507.7 /508.6 /520.7
- IRB 4400 /509.6 /516.7 /517.7 /518.7
- IRB 5710 /503.6 /504.7 /508.6 /519.6 /520.7
- IRB 6650S /504.7 /505.7 /506.7 /507.7 /508.6 /509.6 /520.7 /521.7
- IRB 6660 /504.7 /505.7 /506.7 /507.7 /508.6 /509.6 /520.7 /521.7
- IRB 5720 /503.6 /504.7 /508.6 /519.6 /520.7
- IRB 6700 /503.6 /504.7 /505.7 /506.7 /507.7 /508.6 /520.7 /521.7
- IRB 6710 /503.6 /504.7 /508.6 /519.6 /520.7
- IRB 6720 /503.6 /504.7 /508.6 /519.6 /520.7
- IRB 6730 /503.6 /504.7 /508.6 /519.6 /520.7
- IRB 6740 /503.6 /504.7 /508.6 /519.6 /520.7
- IRB 6790 /503.6 /504.7 /522.6
- IRB 7600 /504.7 /505.7 /506.7 /507.7 /508.6 /509.6 /520.7 /521.7
- IRB 7710 /503.6 /504.7 /508.6 /519.6 /520.7
- IRB 7720 /503.6 /504.7 /508.6 /519.6 /520.7
- IRB 8700 /503.6 /505.7 /506.7 /507.7 /508.6 /520.7 /523.7 /524.6

FLOOR CABLES

We reserve all rights in this document and in the information contained therein. Reproduction, use or disclosure to third parties without express authority is strictly forbidden. © Copyright ABB

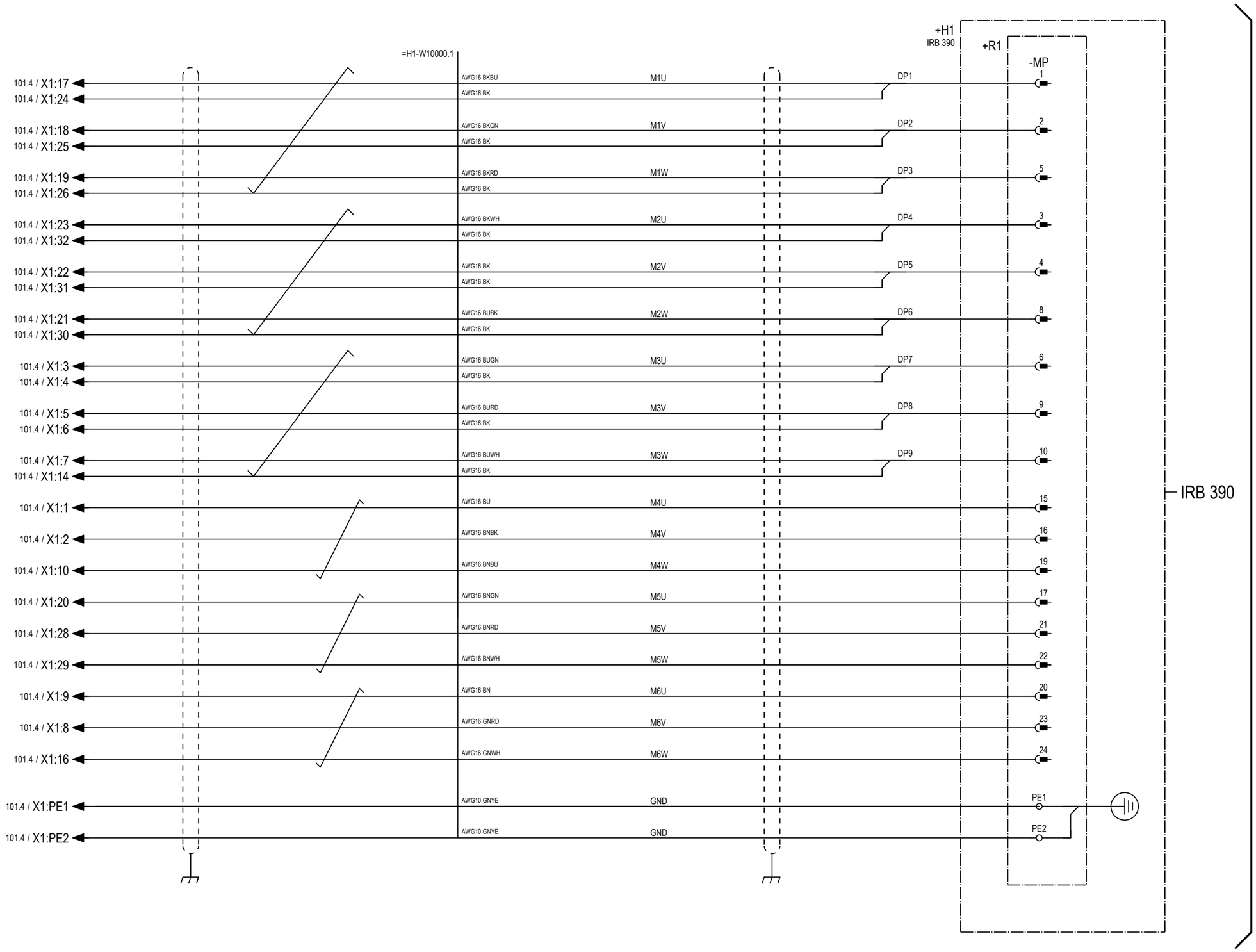

According to Manipulator circuit diagram 3HAC060545-009

Latest revision: See revision text		Lab/Office: RA/RDP	OmniCore V400XT Servo drive system IRB 390	Status: APPROVED	Plant: = Location: + Sublocation: +	
Prepared by, date: E. Mesaros	Approved by, date: M. Wadstein 2025-03-10			Document no. 3HAC082020-008	Rev. Ind 03	Page 501 Next 502 Total 142

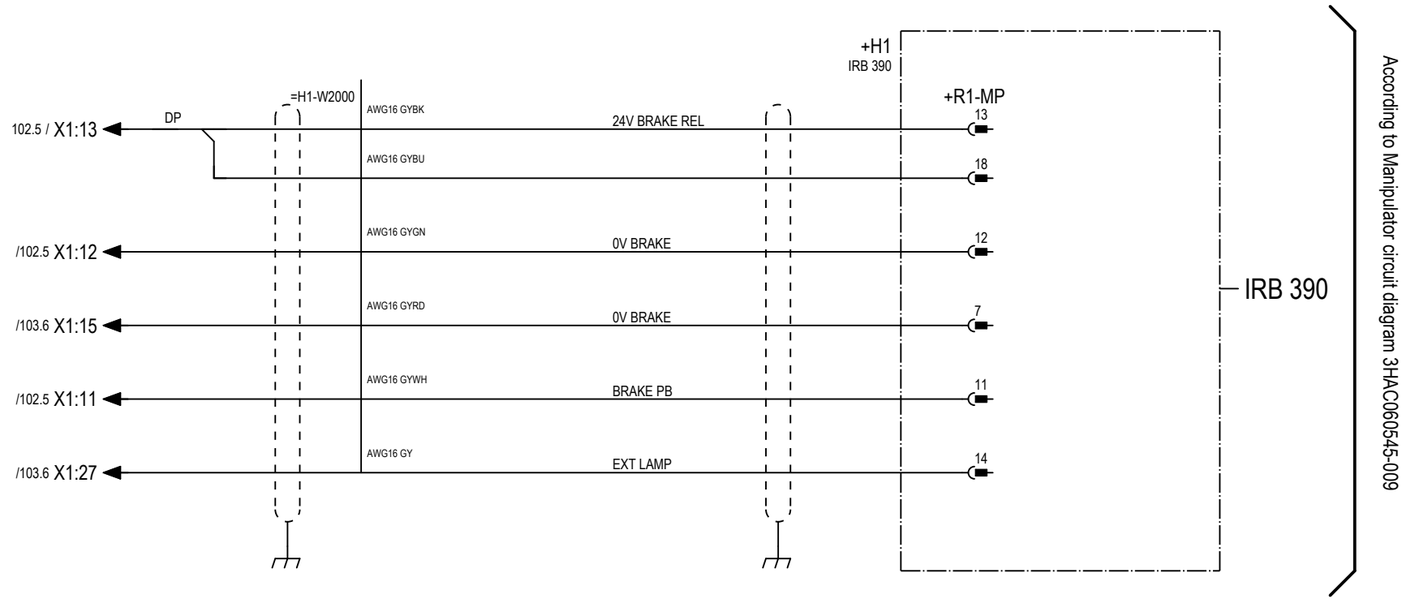

According to Manipulator circuit diagram 3HAC060545-009

We reserve all rights in this document and in the information contained therein. Reproduction, use or disclosure to third parties without express authority is strictly forbidden. © Copyright ABB

Latest revision: See revision text	ABB	Lab/Office: RA/RDP	OmniCore V400XT Control cable IRB 390	Status: APPROVED	Plant: = Location: + Sublocation: +
Prepared by, date: E. Mesaros	Approved by, date: M. Wadstein 2025-03-10			Document no. 3HAC082020-008	Rev. Ind 03

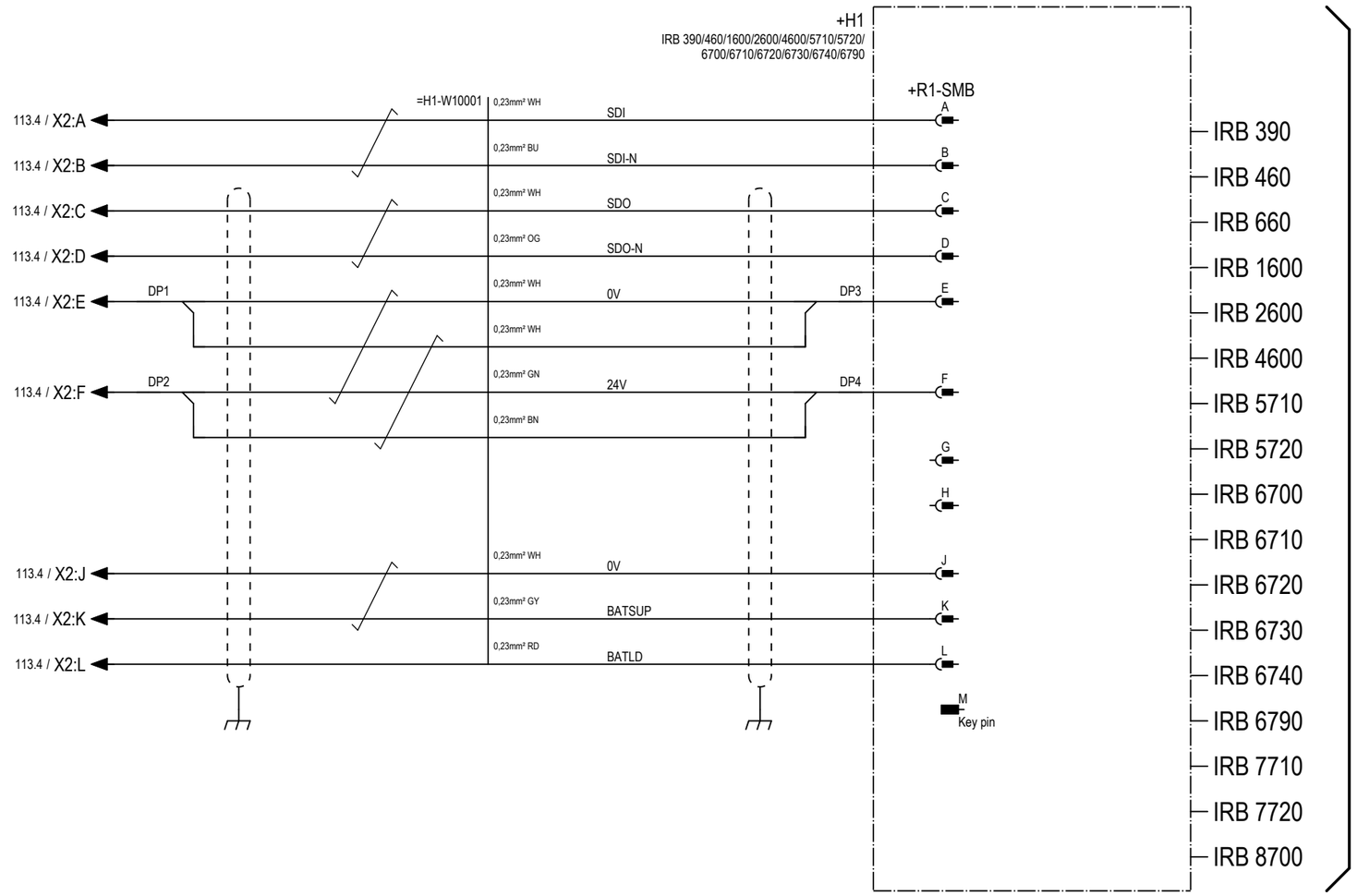

According to Manipulator circuit diagram 3HAC060545-009/3HAC080894-003/3HAC082232-003/
3HAC029570-007/3HAC029038-003/3HAC080367-001/3HAC043446-005/3HAC086333-001

We reserve all rights in this document and in the information contained therein. Reproduction, use or disclosure to third parties without express authority is strictly forbidden. © Copyright ABB

Latest revision: See revision text	ABB	Lab/Office: RA/RDP	OmniCore V400XT SMB IRB 390/460/1600/2600/4600/5710/5720/6700/6710/6720/6730/6740/6790/7710/7720/8700	Status: APPROVED	Plant: = Location: + Sublocation: +
Prepared by, date: E. Mesaros	Approved by, date: M. Wadstein 2025-03-10			Document no. 3HAC082020-008	Rev. Ind 03

We reserve all rights in this document and in the information contained therein. Reproduction, use or disclosure to third parties without express authority is strictly forbidden. © Copyright ABB

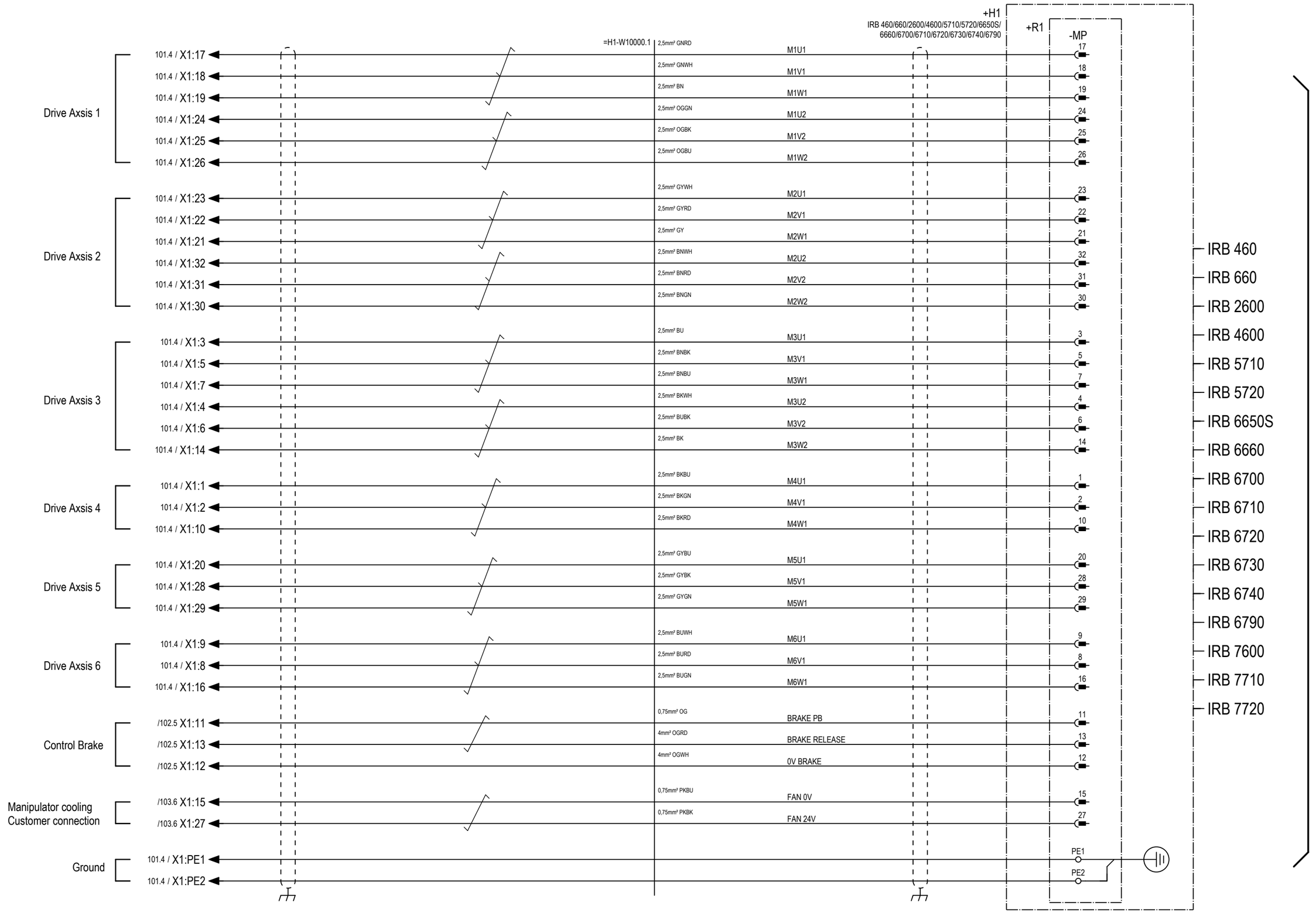

Latest revision: See revision text	ABB	Lab/Office: RA/RDP	OmniCore V400XT Drive and Control cable IRB 460/660/2600/4600/57X0 /6650S/6660/67X0/7600/77X0/8700	Status: APPROVED	Plant: = Location: + Sublocation: +
Prepared by, date: E. Mesaros	Approved by, date: M. Wadstein 2025-03-10			Document no. 3HAC082020-008	Rev. Ind 03
					Page 504 Next 505 Total 142

We reserve all rights in this document and in the information contained therein. Reproduction, use or disclosure to third parties without express authority is strictly forbidden. © Copyright ABB

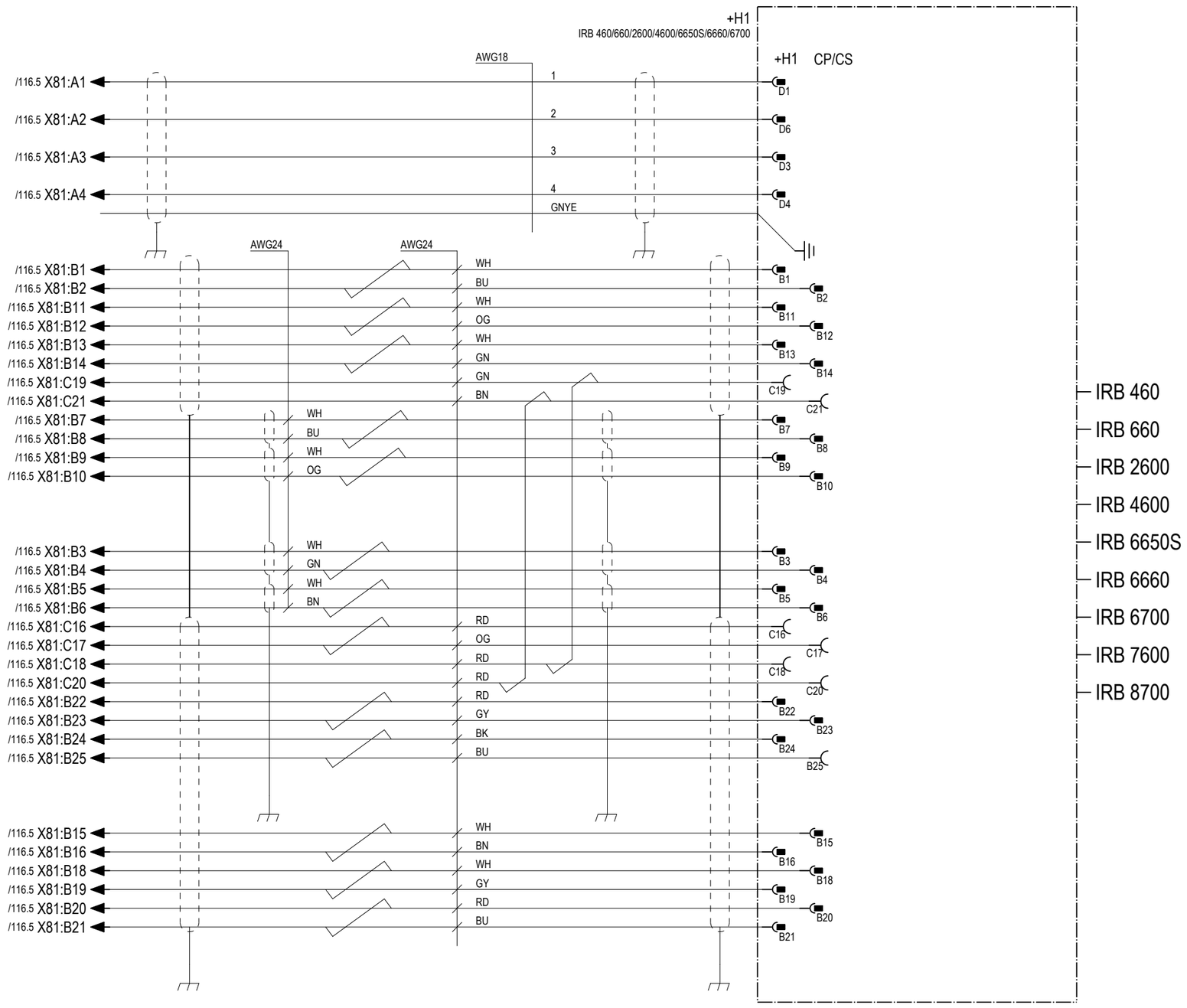

According to Manipulator circuit diagram 3HAC080894-003 / 3HAC025691-001 / 3HAC029570-007 / 3HAC029038-003 / 3HAC025744-001 / 3HAC043446-005

Latest revision: See revision text		ABB	Lab/Office: RA/RDP	OmniCore V400XT Customer power/signal IRB 460/660/2600/4600/6650S/6660/6700/7600/8700	Status: APPROVED	Plant: = Location: + Sublocation: +
Prepared by, date: E. Mesaros	Approved by, date: M. Wadstein 2025-03-10				Document no. 3HAC082020-008	Rev. Ind 03

Page	505
Next	506
Total	142

We reserve all rights in this document and in the information contained therein. Reproduction, use or disclosure to third parties without express authority is strictly forbidden. © Copyright ABB

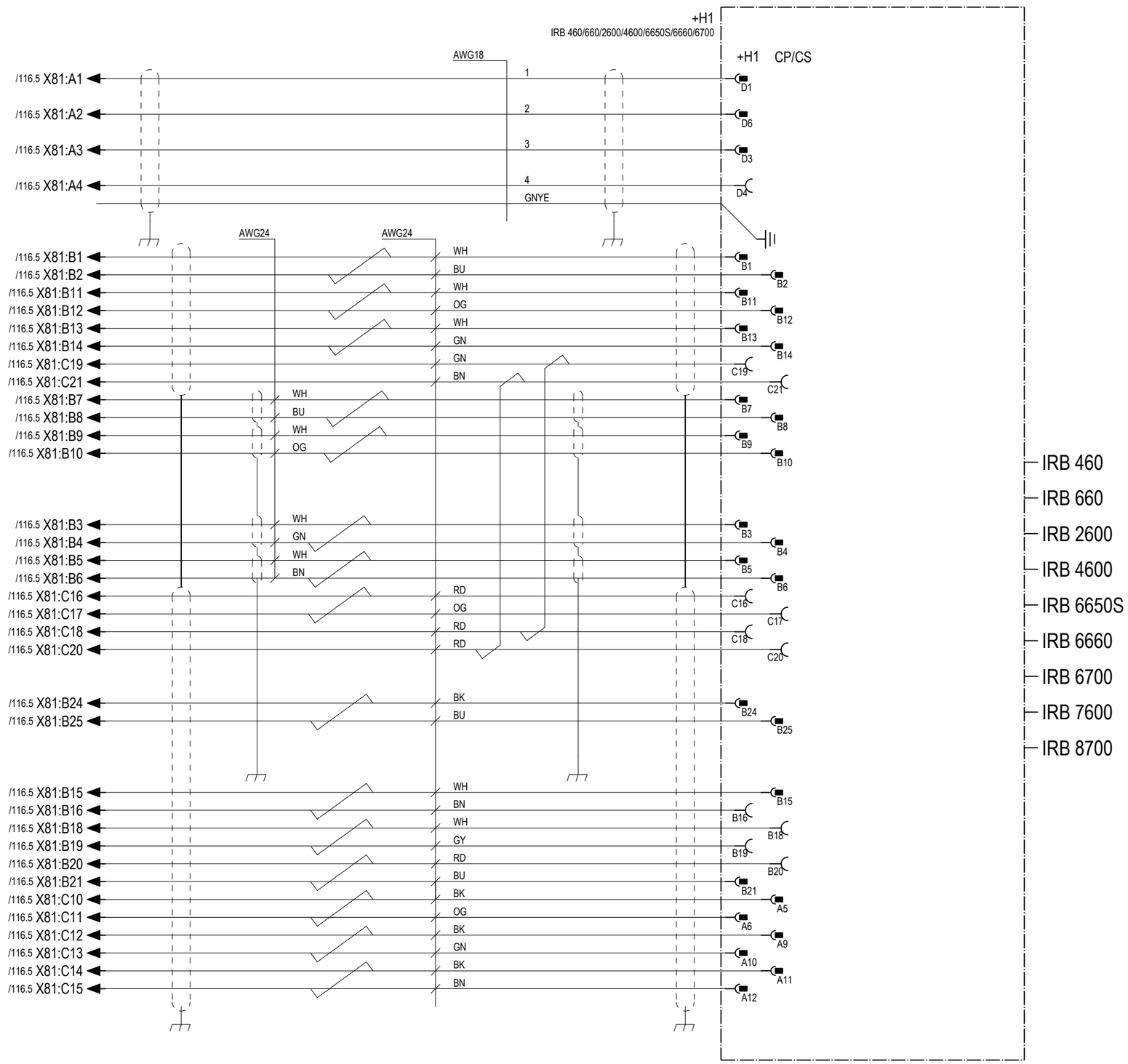

According to Manipulator circuit diagram 3HAC080894-003/3HAC025691-001/3HAC029570-007/3HAC029038-003/3HAC025744-001/3HAC043446-005

Latest revision: See revision text		ABB	Lab/Office: RA/RDP	OmniCore V400XT Customer power/signal DeviceNet IRB 460/660/2600/4600/6650S/6660/6700/7600/8700	Status: APPROVED
Prepared by, date: E. Mesaros	Approved by, date: M. Wadstein 2025-03-10				Plant: = Location: + Sublocation: +
					Document no. 3HAC082020-008
					Rev. Ind 03
					Page 506 Next 507 Total 142

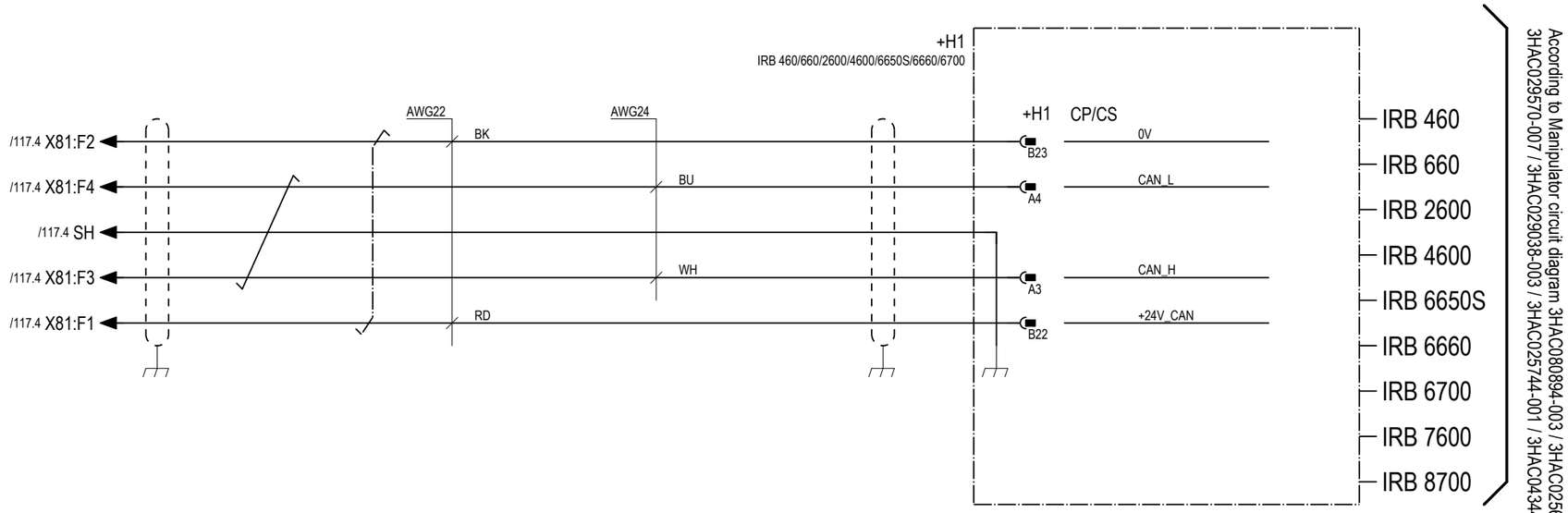

According to Manipulator circuit diagram 3HAC080894-003 / 3HAC025691-001 / 3HAC029570-007 / 3HAC029038-003 / 3HAC025744-001 / 3HAC043446-005

We reserve all rights in this document and in the information contained therein. Reproduction, use or disclosure to third parties without express authority is strictly forbidden. © Copyright ABB

Latest revision: See revision text		Lab/Office: RA/RDP	OmniCore V400XT Customer power/signal DeviceNet IRB 460/660/2600/4600/6650S/6660/6700/7600/8700	Status: APPROVED	Plant: = Location: + Sublocation: +	
Prepared by, date: E. Mesaros	Approved by, date: M. Wadstein 2025-03-10			Document no. 3HAC082020-008	Rev. Ind 03	Page 507 Next 508 Total 142

We reserve all rights in this document and in the information contained therein. Reproduction, use or disclosure to third parties without express authority is strictly forbidden. © Copyright ABB

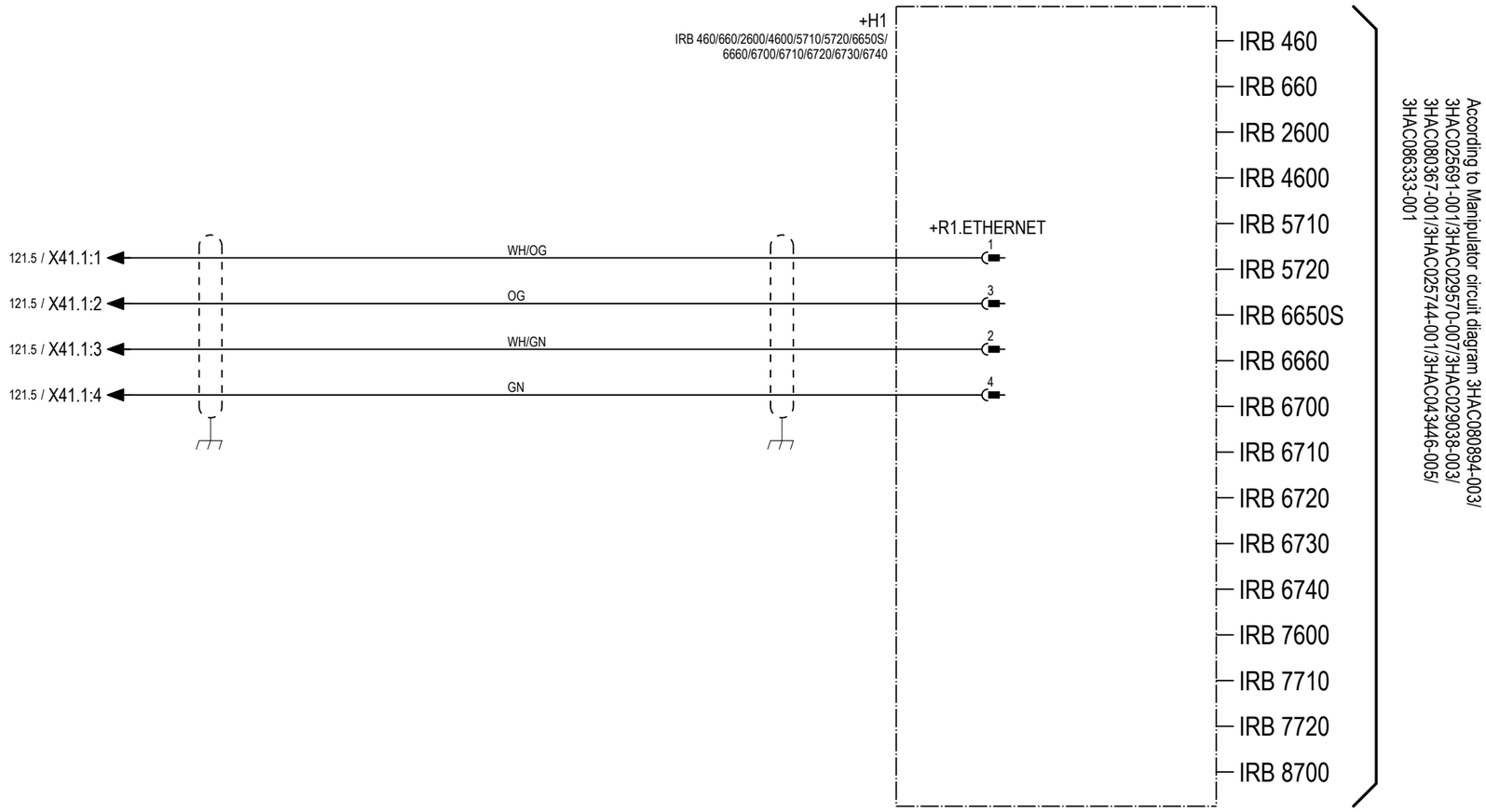

According to Manipulator circuit diagram 3HAC080894-003/
3HAC025691-001/3HAC029570-007/3HAC029038-003/
3HAC080367-001/3HAC025744-001/3HAC043446-005/
3HAC086333-001

Latest revision: See revision text		Lab/Office: RA/RDP	OmniCore V400XT Ethernet IRB 460/660/2600/4600/5710/5720/6650S/6660/6700/6710/6720/6730/6740/7600/7710/7720/8700	Status: APPROVED	Plant: = Location: + Sublocation: +	
Prepared by, date: E. Mesaros	Approved by, date: M. Wadstein 2025-03-10			Document no. 3HAC082020-008	Rev. Ind 03	Page 508 Next 509 Total 142

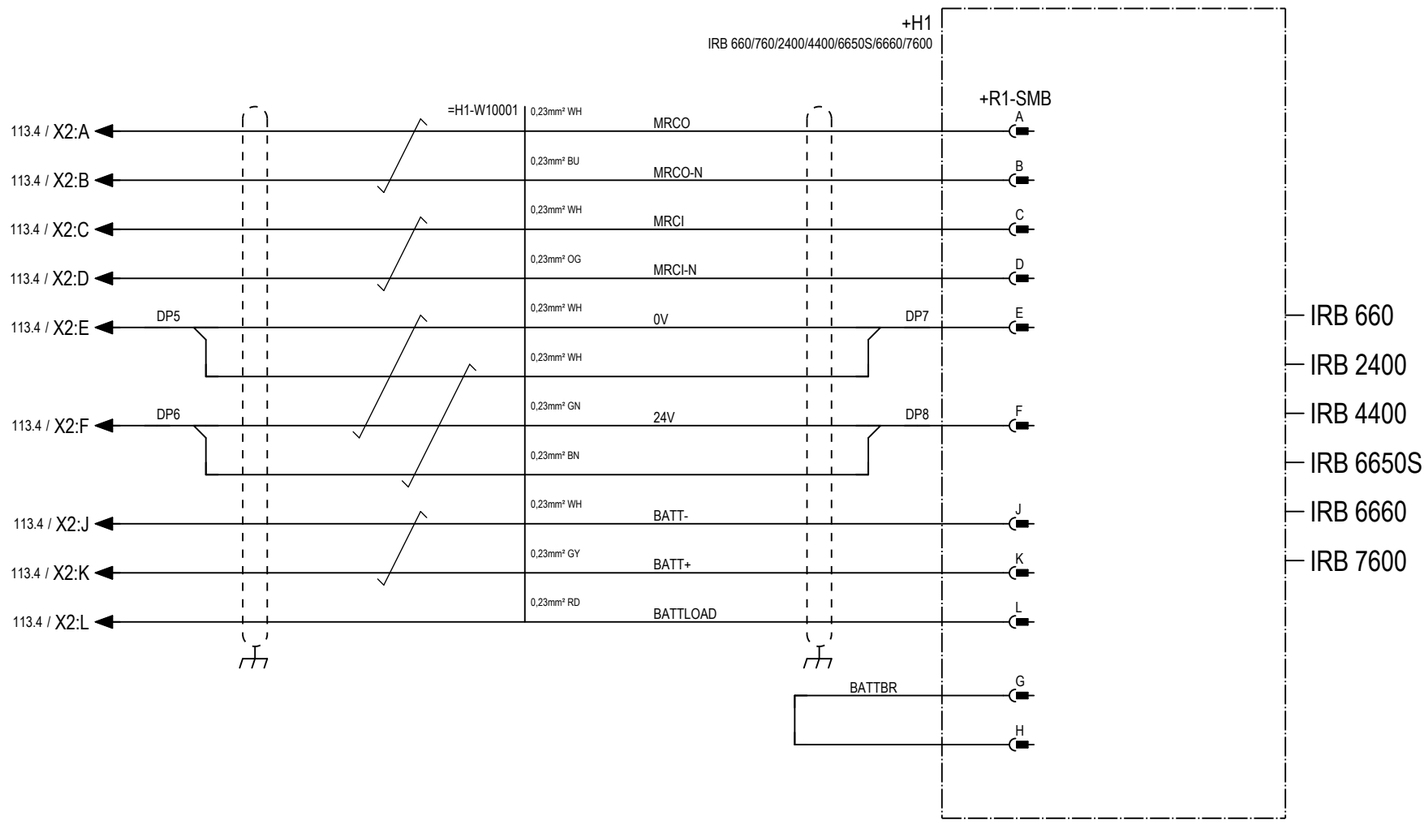

According to Manipulator circuit diagram 3HAC025691-001/3HAC6670-3/3HAC9821-1/3HAC025744-001

We reserve all rights in this document and in the information contained therein. Reproduction, use or disclosure to third parties without express authority is strictly forbidden. © Copyright ABB

Latest revision: See revision text	ABB	Lab/Office: RA/RDP	OmniCore V400XT SMB IRB 660/2400/4400/6650S/6660/7600	Status: APPROVED	Plant: = Location: + Sublocation: +
Prepared by, date: E. Mesaros	Approved by, date: M. Wadstein 2025-03-10			Document no. 3HAC082020-008	Rev. Ind 03

We reserve all rights in this document and in the information contained therein. Reproduction, use or disclosure to third parties without express authority is strictly forbidden. © Copyright ABB

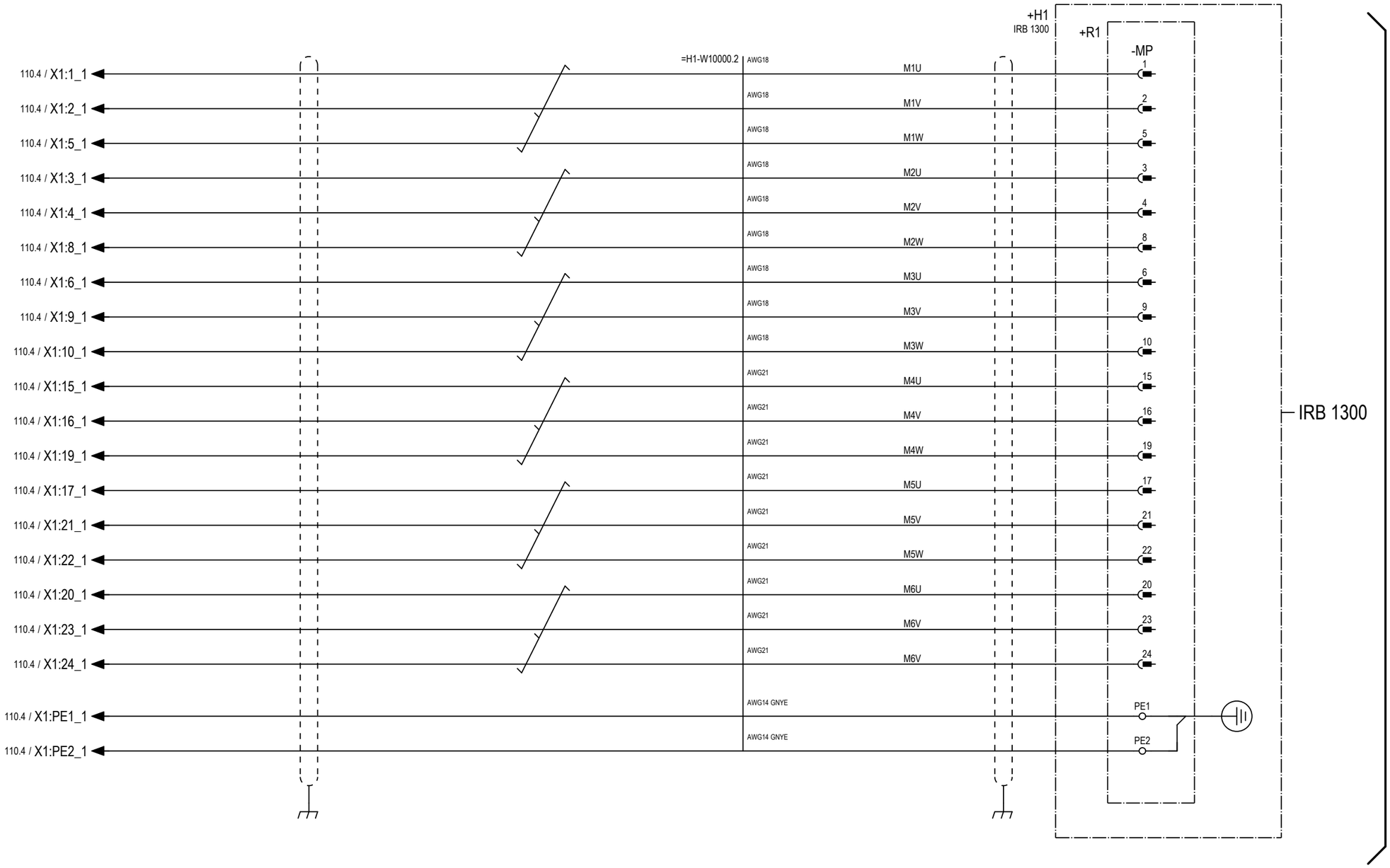

Latest revision: See revision text		Lab/Office: RA/RDP	OmniCore V400XT Servo drive system IRB 1300	Status: APPROVED	Plant: = Location: + Sublocation: +
Prepared by, date: E. Mesaros	Approved by, date: M. Wadstein 2025-03-10			Document no. 3HAC082020-008	Rev. Ind 03

Page	510
Next	511
Total	142

We reserve all rights in this document and in the information contained therein. Reproduction, use or disclosure to third parties without express authority is strictly forbidden. © Copyright ABB

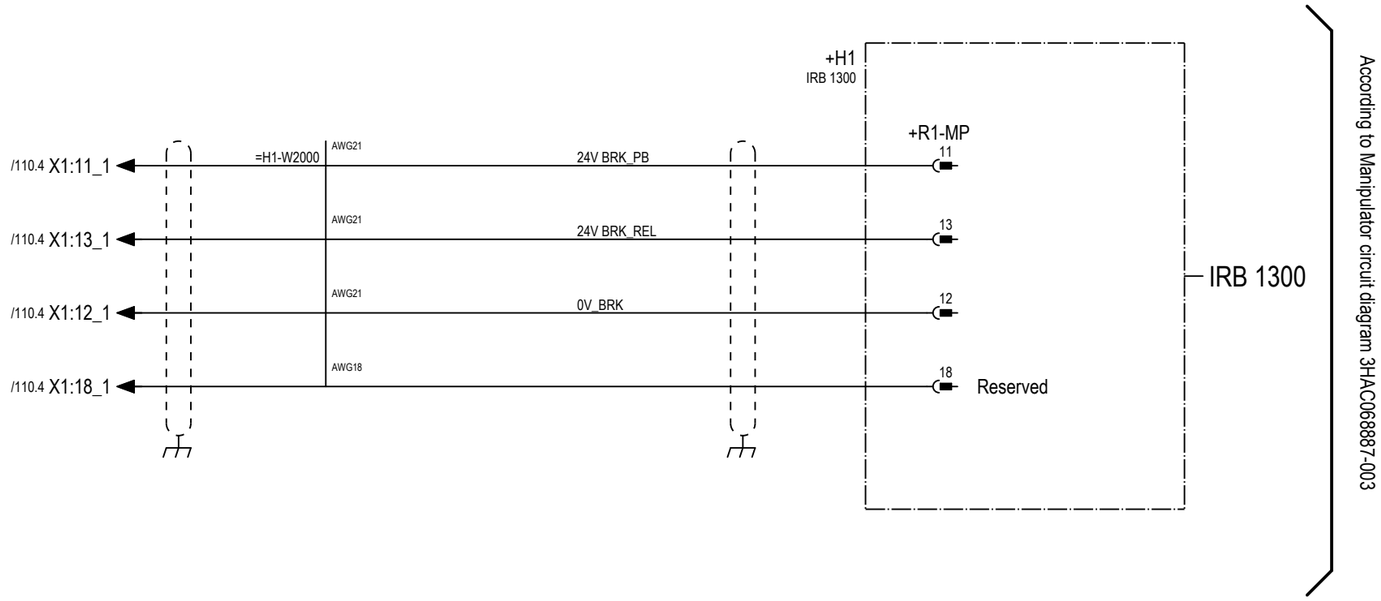

Latest revision: See revision text		Lab/Office: RA/RDP	OmniCore V400XT Control cable IRB 1300	Status: APPROVED	Plant: = Location: + Sublocation: +	
Prepared by, date: E. Mesaros	Approved by, date: M. Wadstein 2025-03-10			Document no. 3HAC082020-008	Rev. Ind 03	Page 511 Next 512 Total 142

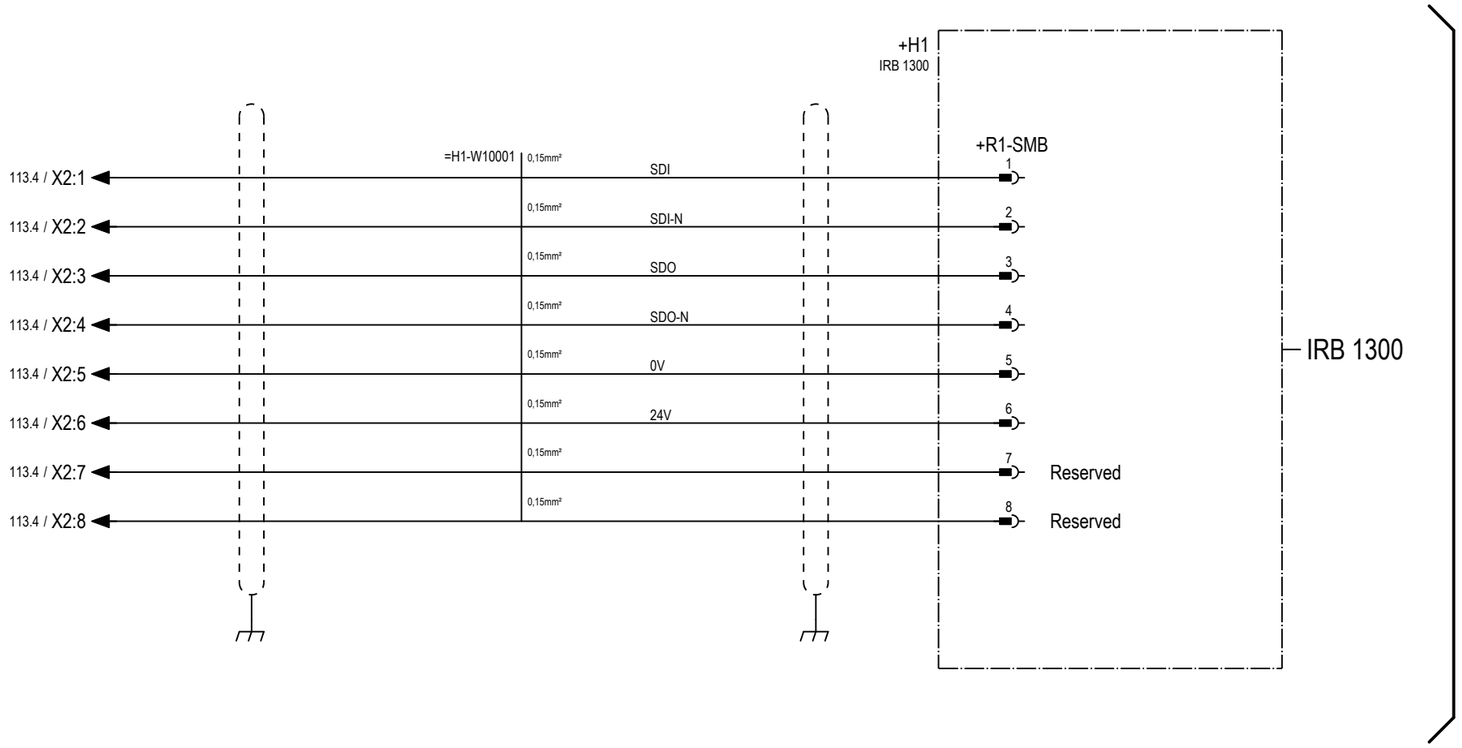

We reserve all rights in this document and in the information contained therein. Reproduction, use or disclosure to third parties without express authority is strictly forbidden. © Copyright ABB

Latest revision: See revision text	ABB	Lab/Office: RA/RDP	OmniCore V400XT SMB IRB 1300	Status: APPROVED	Plant: = Location: + Sublocation: +
Prepared by, date: E. Mesaros	Approved by, date: M. Wadstein 2025-03-10			Document no. 3HAC082020-008	Rev. Ind 03

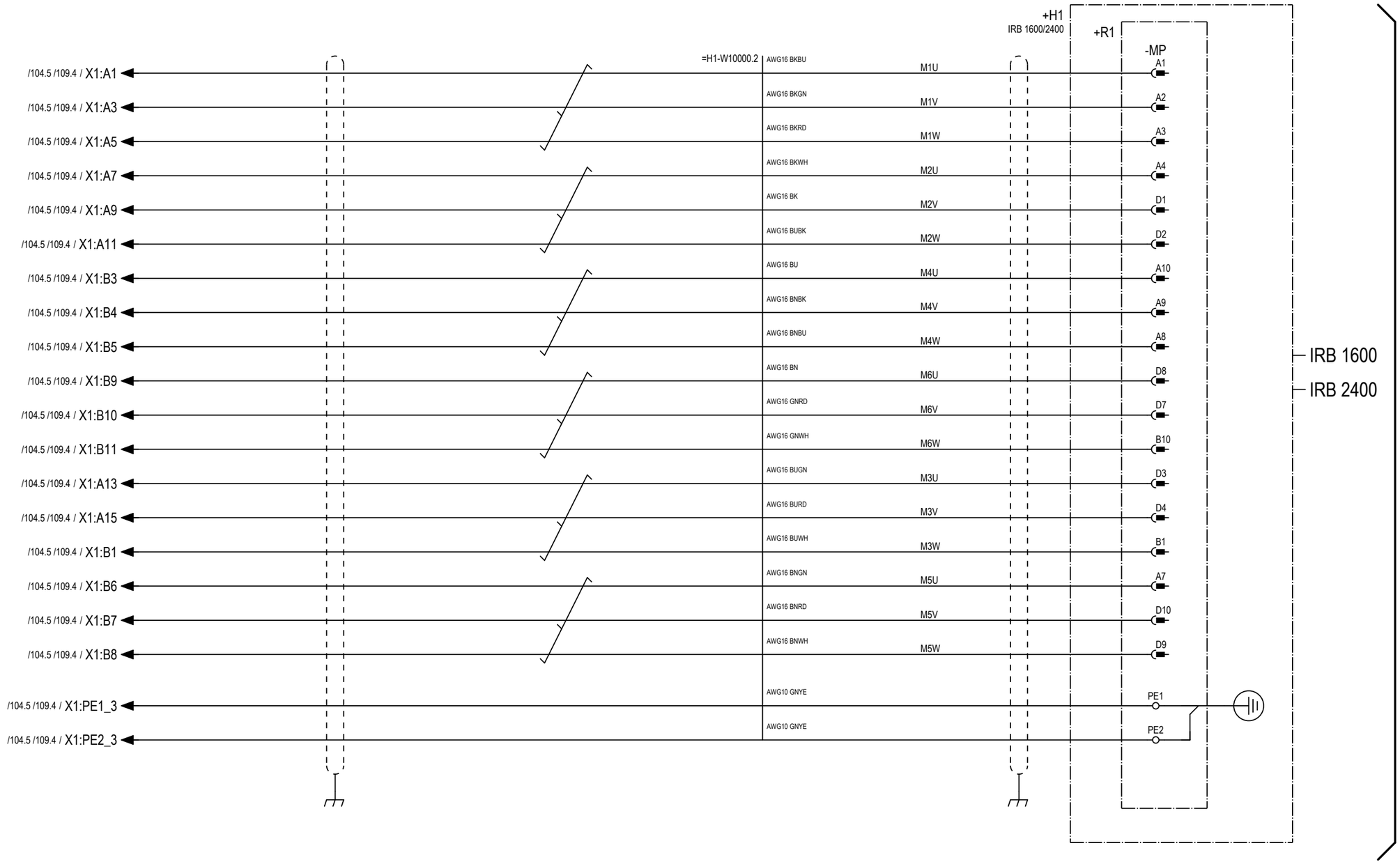

According to Manipulator circuit diagram 3HAC6670-3/3HAC082232-003

We reserve all rights in this document and in the information contained therein. Reproduction, use or disclosure to third parties without express authority is strictly forbidden. © Copyright ABB

Latest revision: See revision text	ABB	Lab/Office: RA/RDP	OmniCore V400XT Servo drive system IRB 1600/2400	Status: APPROVED	Plant: = Location: + Sublocation: +
Prepared by, date: E. Mesaros	Approved by, date: M. Wadstein 2025-03-10			Document no. 3HAC082020-008	Rev. Ind 03

We reserve all rights in this document and in the information contained therein. Reproduction, use or disclosure to third parties without express authority is strictly forbidden. © Copyright ABB

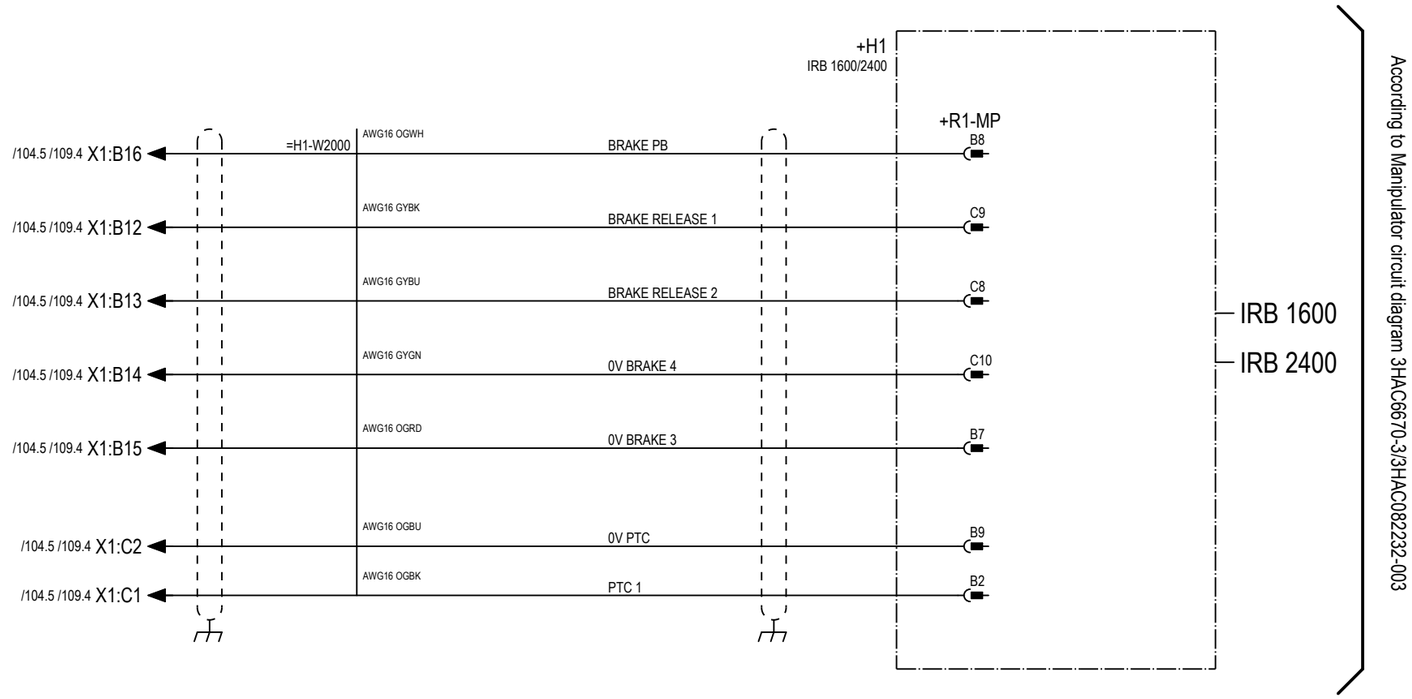

According to Manipulator circuit diagram 3HAC6670-3/3HAC082232-003

Latest revision: See revision text		Lab/Office: RA/RDP	OmniCore V400XT Control cable IRB 1600/2400	Status: APPROVED	Plant: = Location: + Sublocation: +	
Prepared by, date: E. Mesaros	Approved by, date: M. Wadstein 2025-03-10			Document no. 3HAC082020-008	Rev. Ind 03	Page 514 Next 515 Total 142

We reserve all rights in this document and in the information contained therein. Reproduction, use or disclosure to third parties without express authority is strictly forbidden. © Copyright ABB

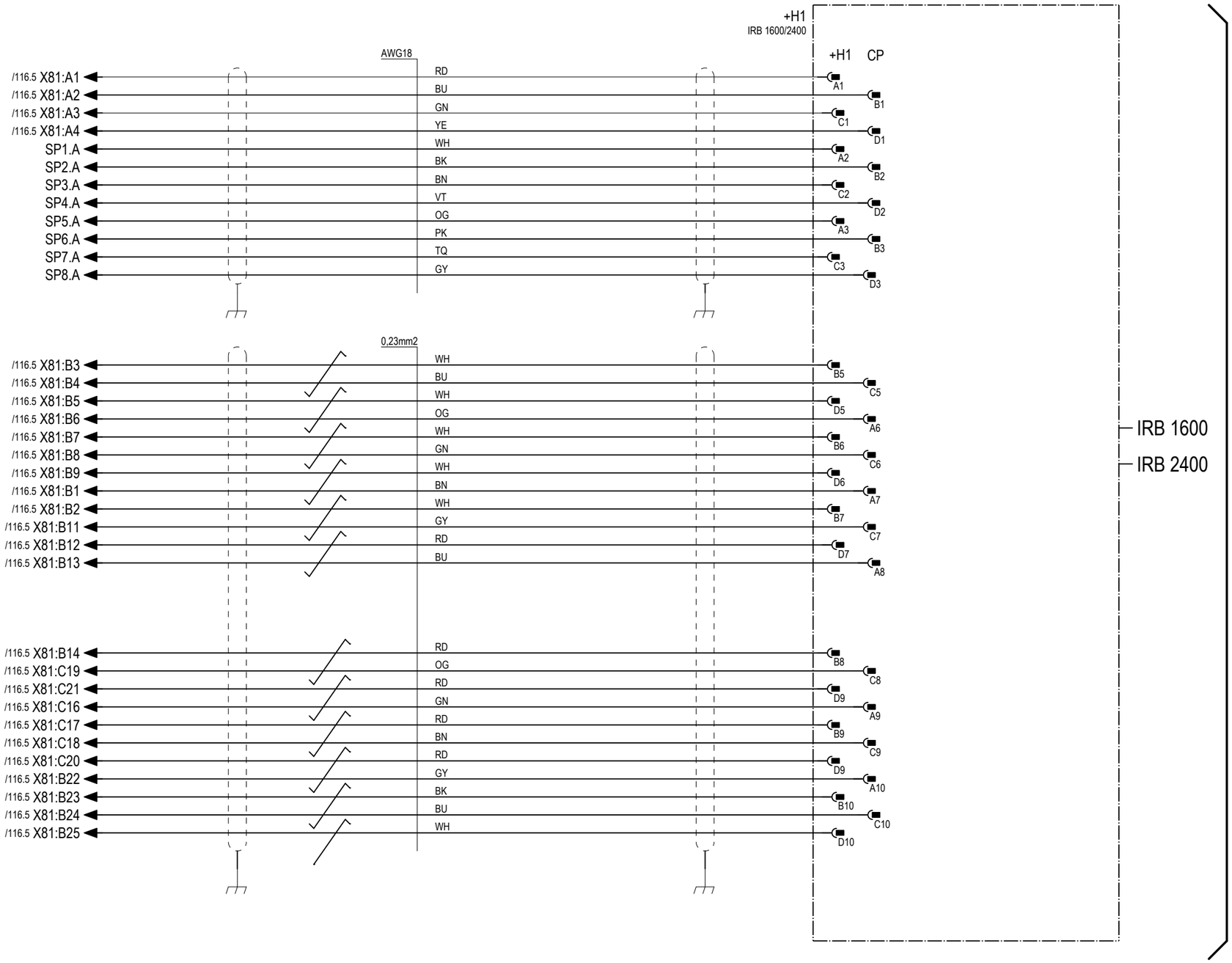

According to Manipulator circuit diagram 3HAC082232-003/3HAC6670-3

Latest revision: See revision text		Lab/Office: RA/RDP	OmniCore V400XT Customer power/signal IRB 1600/2400	Status: APPROVED	Plant: = Location: + Sublocation: +	
Prepared by, date: E. Mesaros	Approved by, date: M. Wadstein 2025-03-10			Document no. 3HAC082020-008	Rev. Ind 03	Page 515 Next 516 Total 142

We reserve all rights in this document and in the information contained therein. Reproduction, use or disclosure to third parties without express authority is strictly forbidden. © Copyright ABB

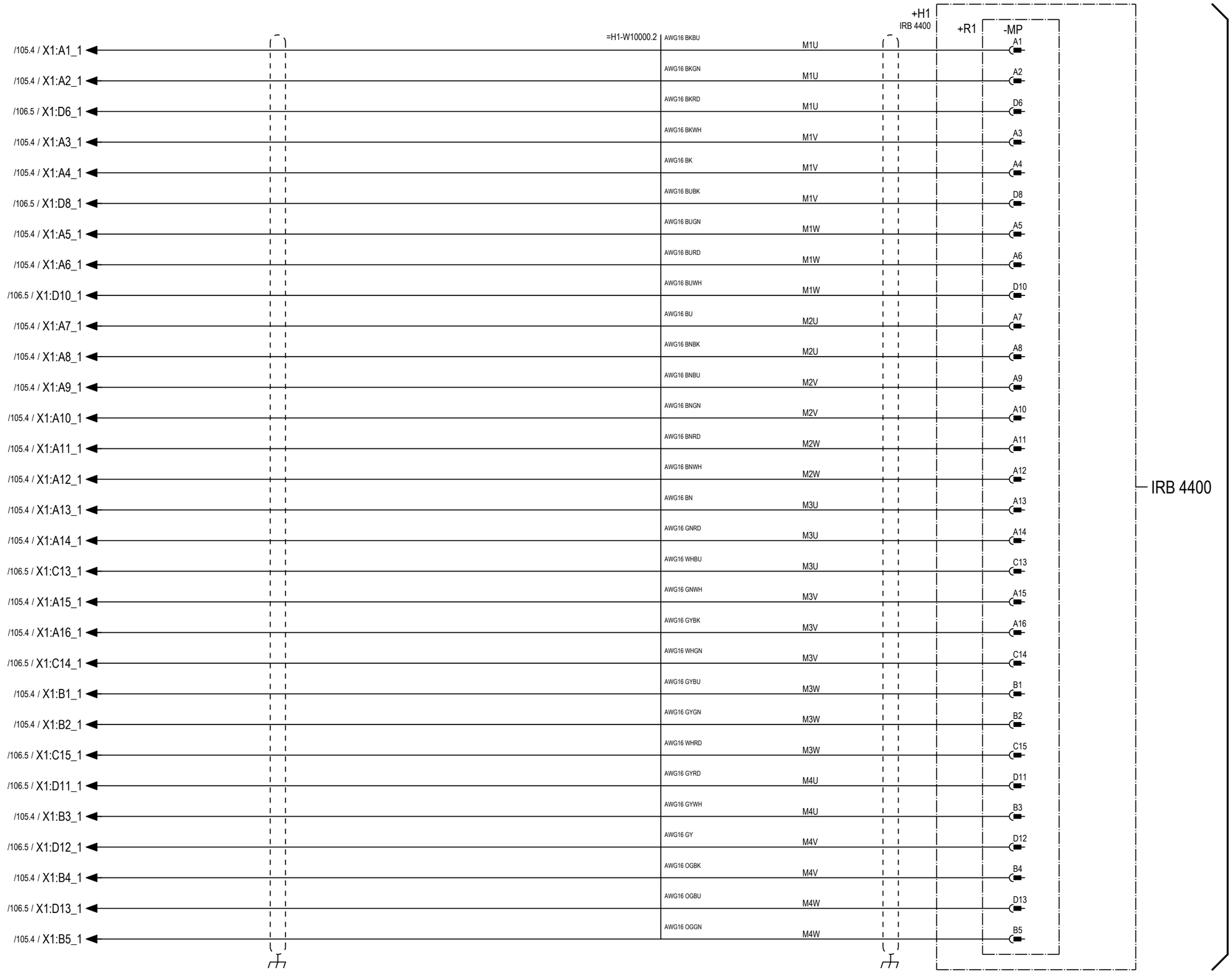

Latest revision: See revision text		Lab/Office: RA/RDP	OmniCore V400XT Servo drive system IRB 4400	Status: APPROVED	Plant: = Location: + Sublocation: +
Prepared by, date: E. Mesaros	Approved by, date: M. Wadstein 2025-03-10			Document no. 3HAC082020-008	Rev. Ind 03

Page	516
Next	517
Total	142

We reserve all rights in this document and in the information contained therein. Reproduction, use or disclosure to third parties without express authority is strictly forbidden. © Copyright ABB

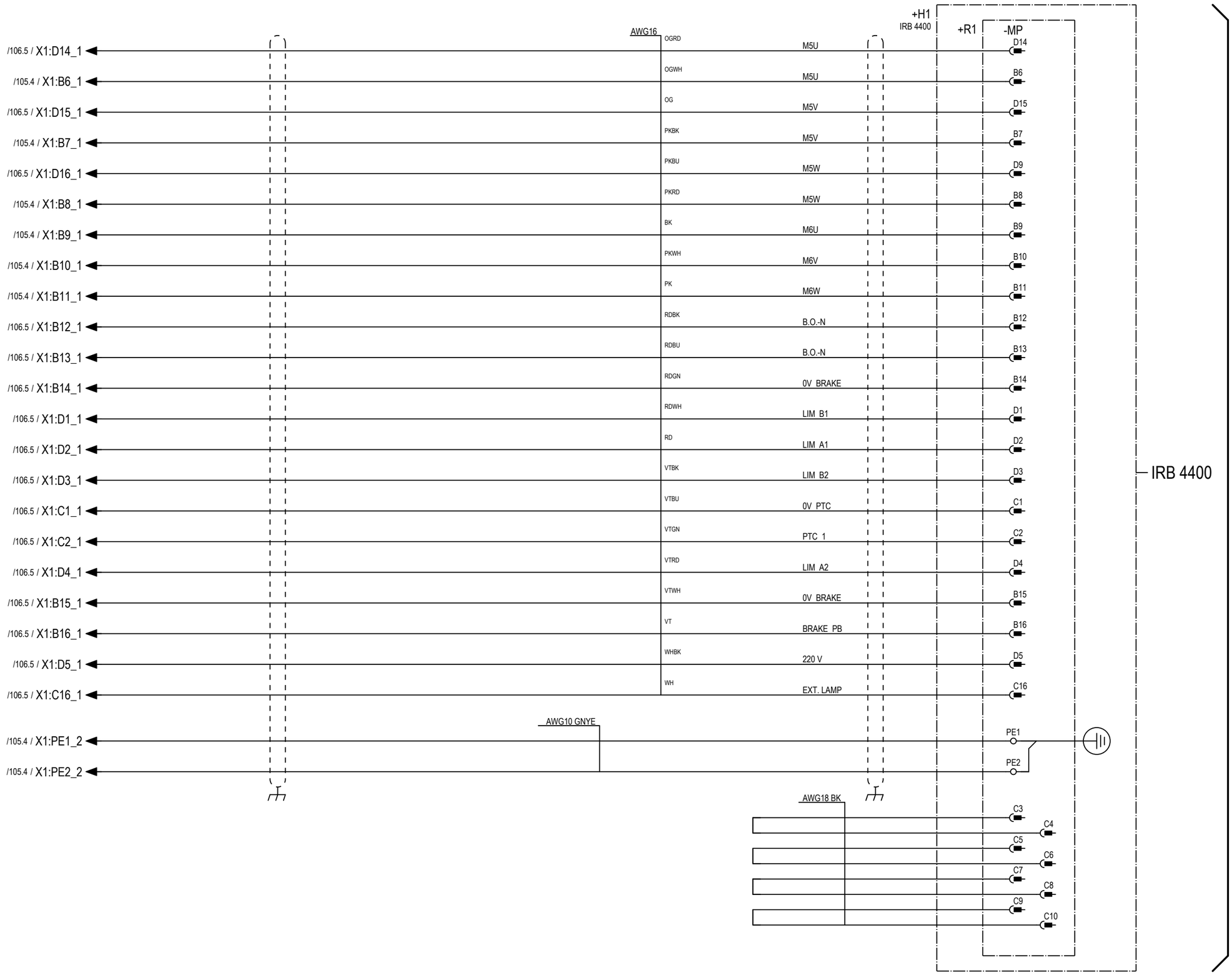

According to Manipulator circuit diagram 3HAC9821-1

Latest revision: See revision text		Lab/Office: RA/RDP	OmniCore V400XT Servo drive system IRB 4400	Status: APPROVED	Plant: = Location: + Sublocation: +
Prepared by, date: E. Mesaros	Approved by, date: M. Wadstein 2025-03-10			Document no. 3HAC082020-008	Rev. Ind 03
					Page 517 Next 518 Total 142

We reserve all rights in this document and in the information contained therein. Reproduction, use or disclosure to third parties without express authority is strictly forbidden. © Copyright ABB

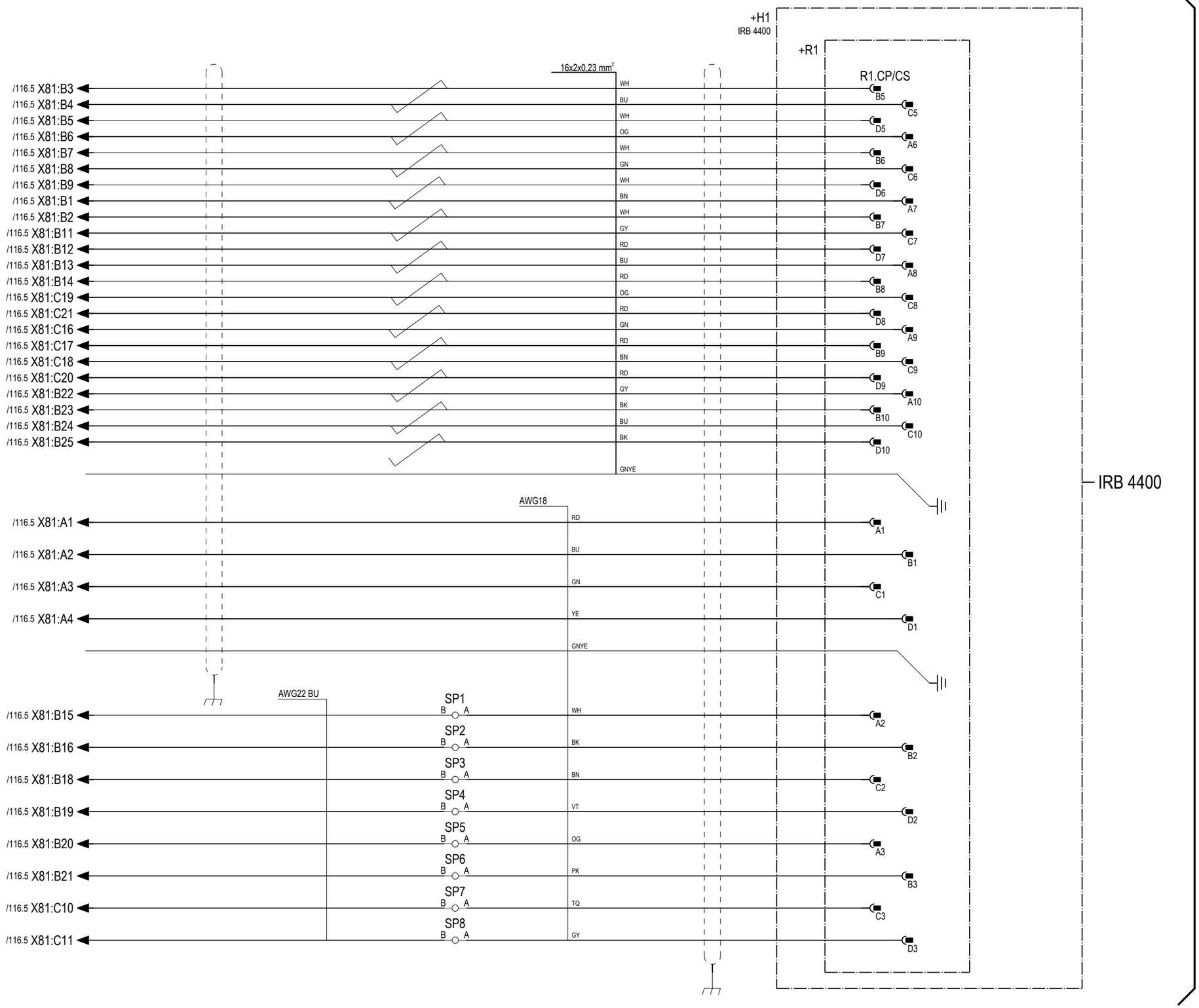

According to Manipulator circuit diagram 3HAC9821-1

Latest revision: See revision text		Lab/Office: RA/RDP	OmniCore V400XT Customer power/signal IRB 4400	Status: APPROVED	Plant: = Location: + Sublocation: +
Prepared by, date: E. Mesaros	Approved by, date: M. Wadstein 2025-03-10			Document no. 3HAC082020-008	Rev. Ind 03

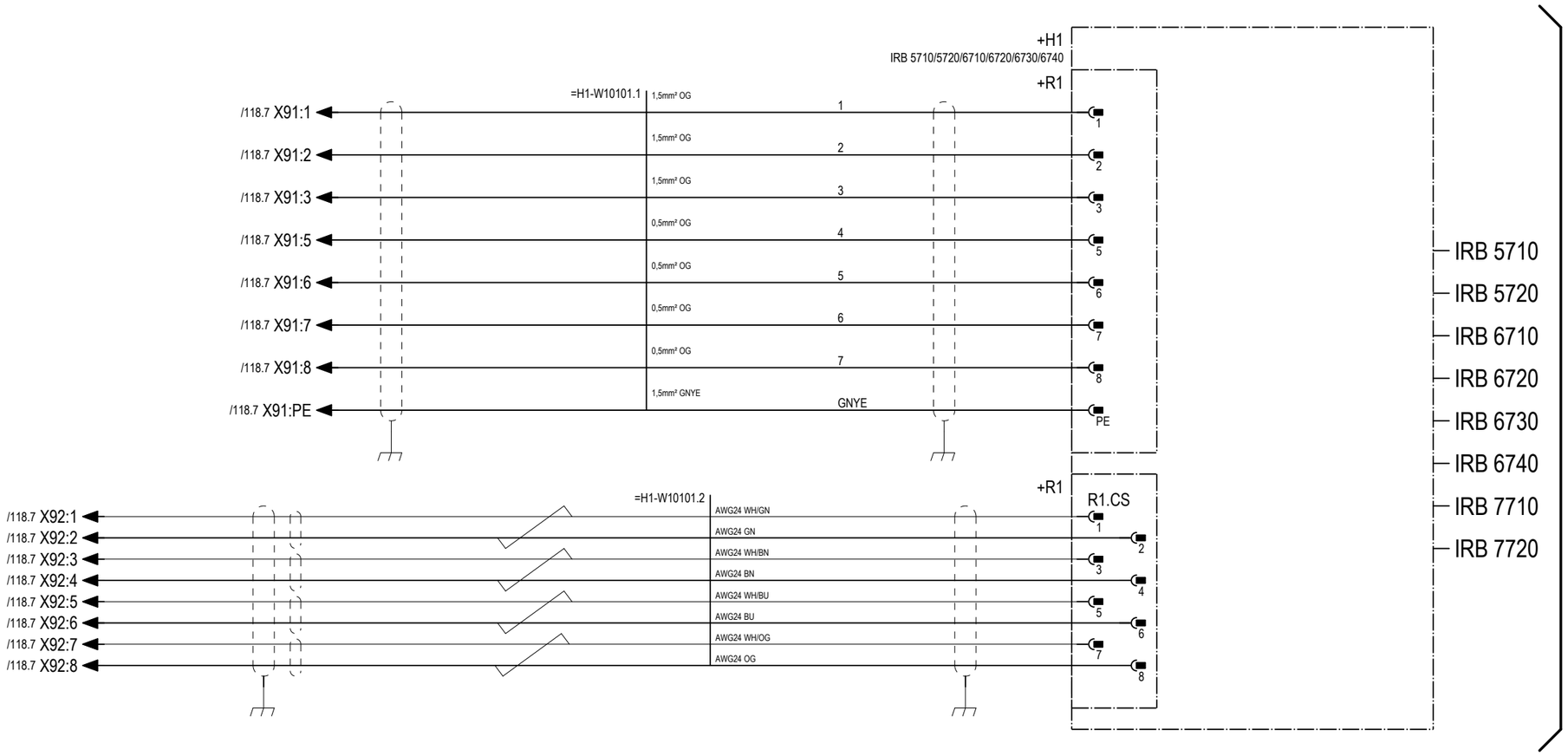

According to Manipulator circuit diagram 3HAC080367-001/3HAC086333-001

We reserve all rights in this document and in the information contained therein. Reproduction, use or disclosure to third parties without express authority is strictly forbidden. © Copyright ABB

Latest revision: See revision text		Lab/Office: RA/RDP	OmniCore V400XT Customer power/signal IRB 5710/5720/6710/6720/6730/6740/7710/7720	Status: APPROVED	Plant: = Location: + Sublocation: +
Prepared by, date: E. Mesaros	Approved by, date: M. Wadstein 2025-03-10			Document no. 3HAC082020-008	Rev. Ind 03

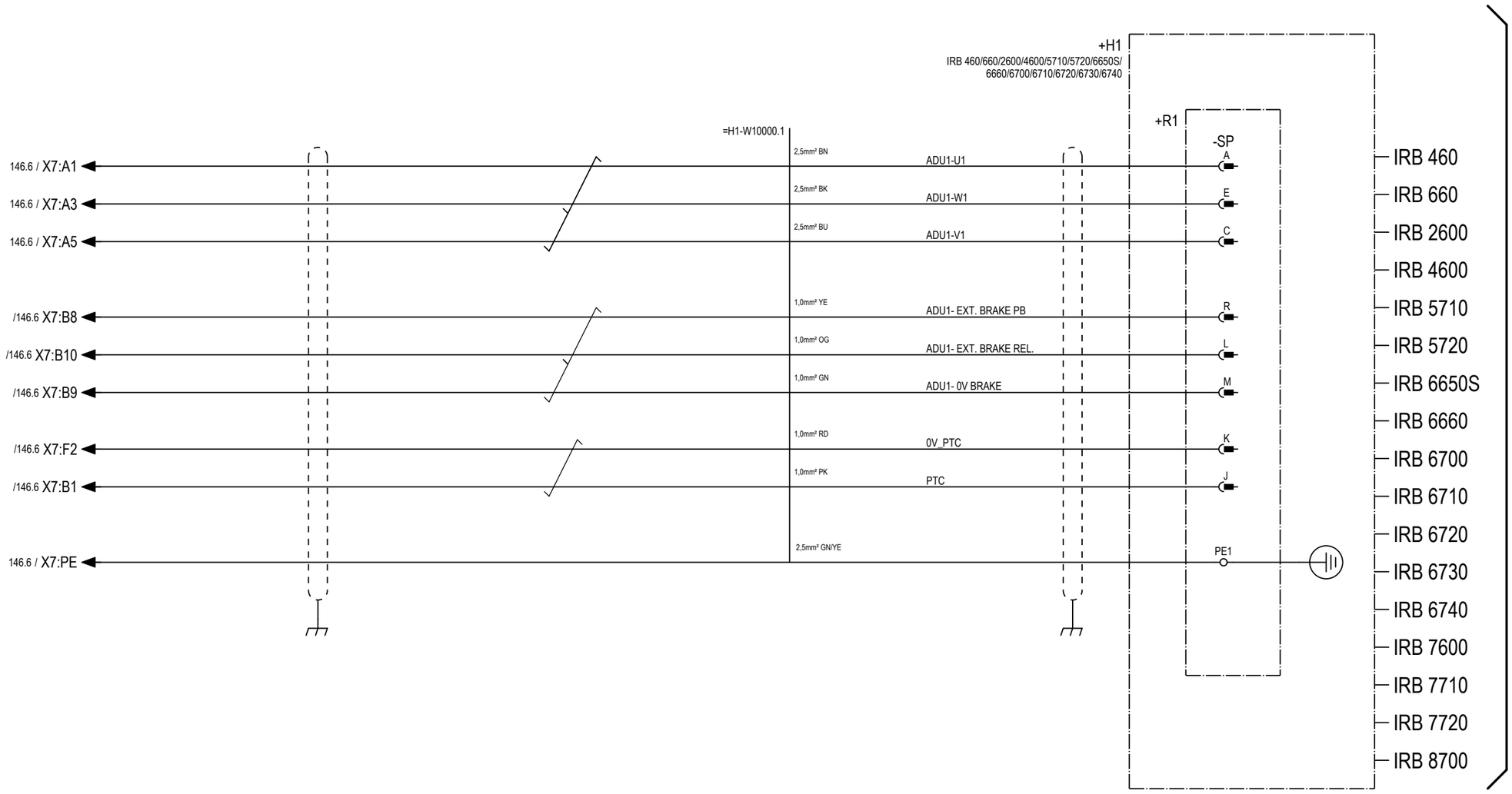

According to Manipulator circuit diagram 3HAC080894-003/3HAC025691-001/
3HAC029570-007/3HAC029038-003/3HAC080367-001/3HAC025744-001/
3HAC043446-005/3HAC086333-001/

We reserve all rights in this document and in the information contained therein. Reproduction, use or disclosure to third parties without express authority is strictly forbidden. © Copyright ABB

Latest revision: See revision text	ABB	Lab/Office: RA/RDP	OmniCore V400XT Servo 1 axis IRB 460/660/2600/4600/5710/5720/6650S/6660/6700/6710/6720/6730/67407600/7710/7720/8700	Status: APPROVED	Plant: = Location: + Sublocation: +	
Prepared by, date: E. Mesaros	Approved by, date: M. Wadstein 2025-03-10			Document no. 3HAC082020-008	Rev. Ind 03	Page 520 Next 521 Total 142

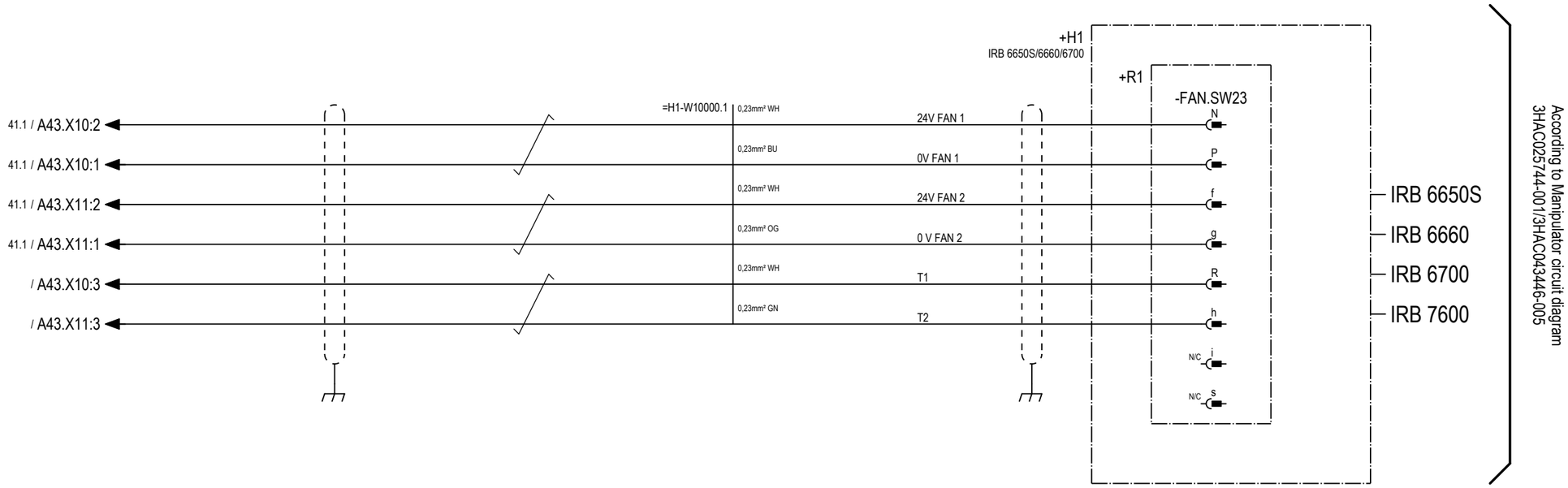

We reserve all rights in this document and in the information contained therein. Reproduction, use or disclosure to third parties without express authority is strictly forbidden. © Copyright ABB

Latest revision: See revision text	ABB	Lab/Office: RA/RDP	OmniCore V400XT Motor cooling axes IRB 6650S/6660/6700/7600	Status: APPROVED	Plant: = Location: + Sublocation: +	
				Document no. 3HAC082020-008	Rev. Ind 03	Page 521 Next 522 Total 142
Prepared by, date: E. Mesaros	Approved by, date: M. Wadstein 2025-03-10					

We reserve all rights in this document and in the information contained therein. Reproduction, use or disclosure to third parties without express authority is strictly forbidden. © Copyright ABB

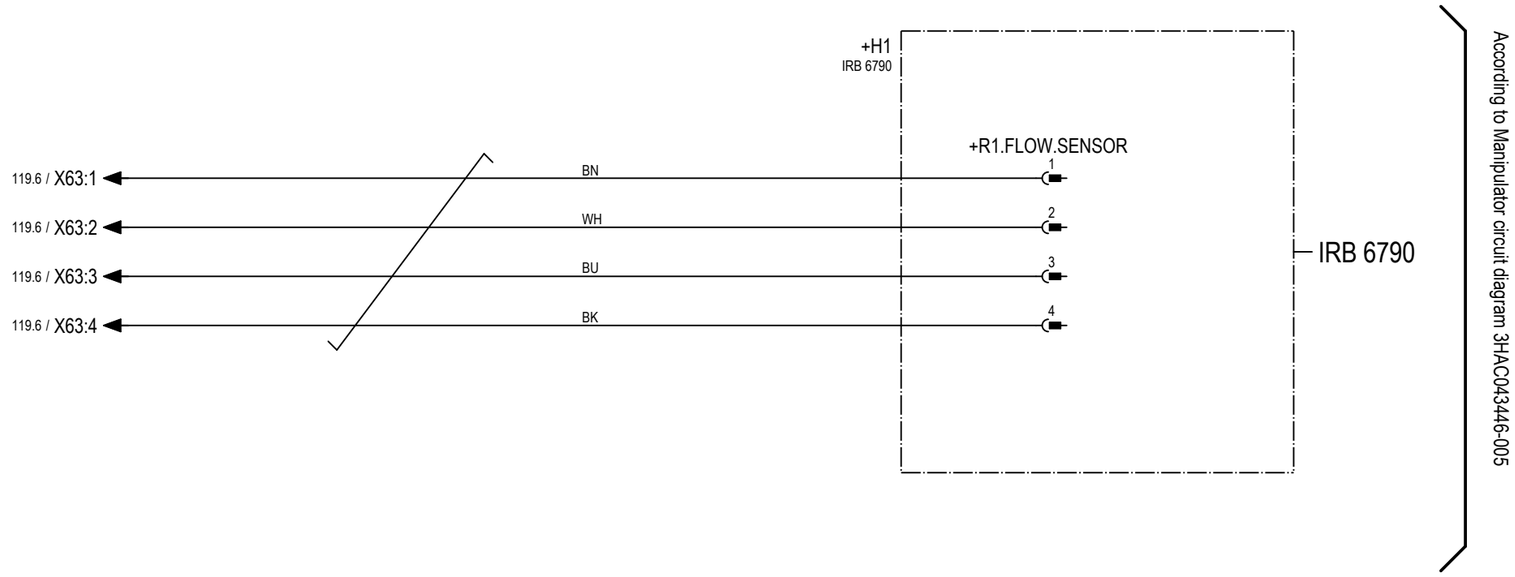

Latest revision: See revision text		Lab/Office: RA/RDP	OmniCore V400XT Flow sensor IRB 6790	Status: APPROVED	Plant: = Location: + Sublocation: +	
Prepared by, date: E. Mesaros	Approved by, date: M. Wadstein 2025-03-10			Document no. 3HAC082020-008	Rev. Ind 03	Page 522 Next 523 Total 142

We reserve all rights in this document and in the information contained therein. Reproduction, use or disclosure to third parties without express authority is strictly forbidden. © Copyright ABB

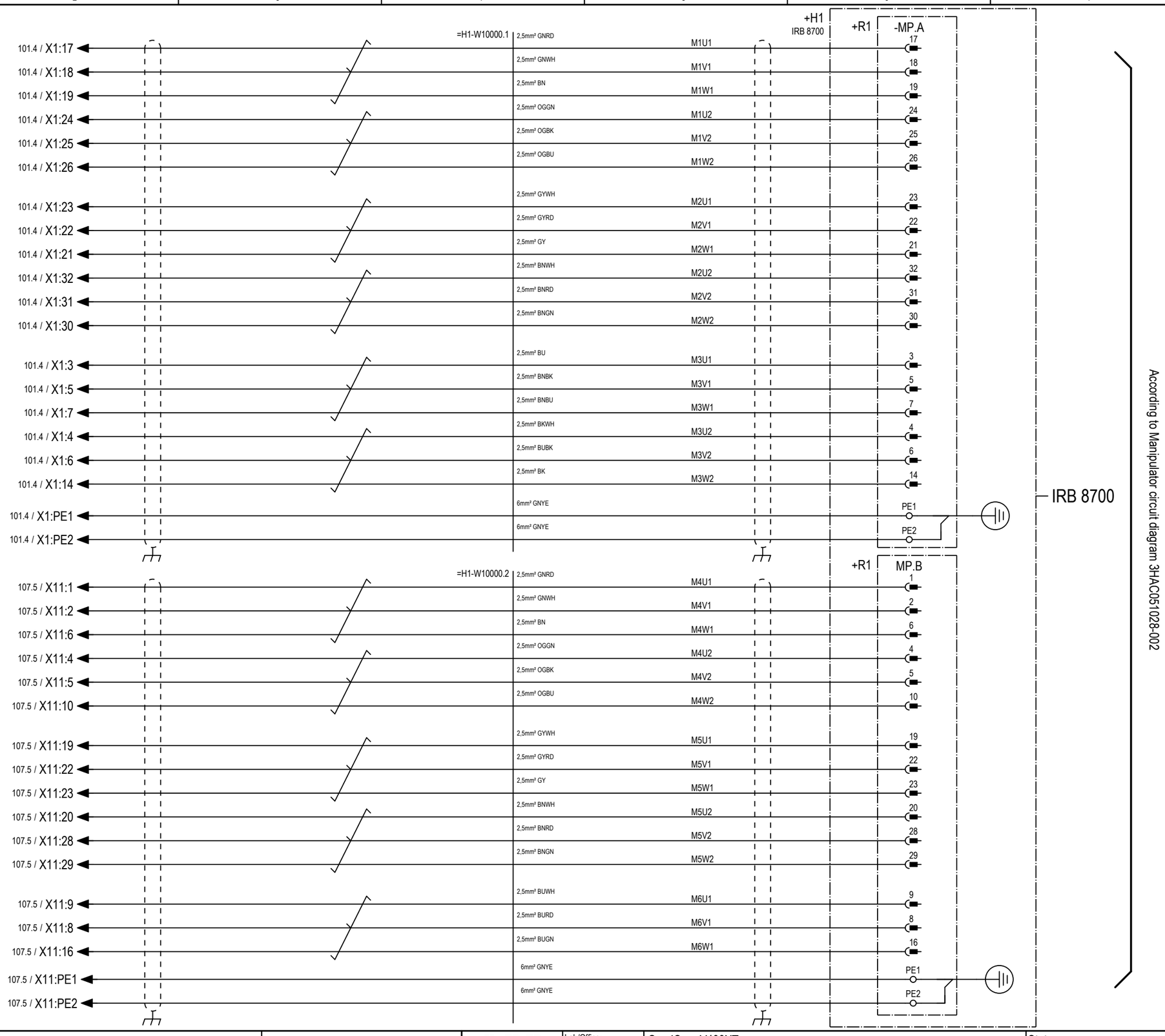

Latest revision: See revision text		Lab/Office: RA/RDP	OmniCore V400XT Servo drive system IRB 8700	Status: APPROVED	Plant: = Location: + Sublocation: +
Prepared by, date: E. Mesaros	Approved by, date: M. Wadstein 2025-03-10			Document no. 3HAC082020-008	Rev. Ind 03
					Page 523 Next 524 Total 142

We reserve all rights in this document and in the information contained therein. Reproduction, use or disclosure to third parties without express authority is strictly forbidden. © Copyright ABB

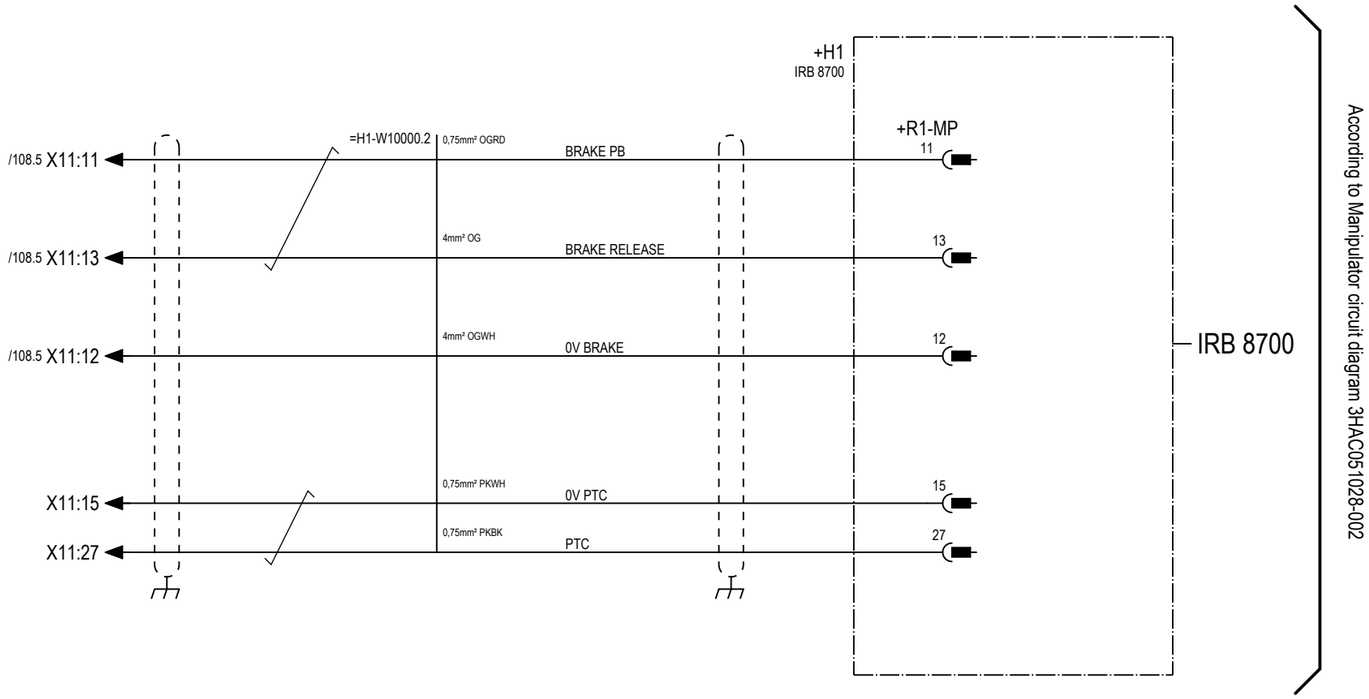

Latest revision: See revision text		Lab/Office: RA/RDP	OmniCore V400XT Control cable IRB 8700	Status: APPROVED	Plant: = Location: + Sublocation: +	
Prepared by, date: E. Mesaros	Approved by, date: M. Wadstein 2025-03-10			Document no. 3HAC082020-008	Rev. Ind 03	Page 524 Next Total 142